KDM®

INTERTEK ISO 9001:2000

ANAB ACCREDITED

# PISTON VALVES
# ANSI Standard

### *KDM Piston valves= BEST PERFORMANCE*

KDM piston valves are considered the high performance in globe & gate type valves in the industry. Thanks to its sealing system, maintenance is minimum and it warranties 0 (zero) leaks, this means, install and forget.

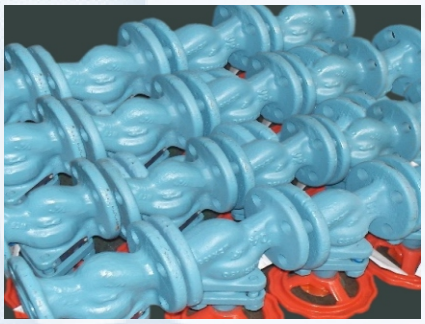

### *Reliably tight to the atmosphere*

Thank to the K-Graf sealing rings made of treated graphite, (asbestos free), the KDM piston valve will not present leaks to the atmosphere, which means you will not have environment pollution.

### *Valve maintenance in line*

The KDM piston valve is absolutely maintenance free for long time. In case used-up valve rings have to be changed, this is very simply made while the valve does not have to be dismounted from the line.

### *Long term minimal maintenance*

A stainless piston and two semi-elastic valve ring make up the sealing element. The upper K-Graf valve ring provides the seal to the exterior. The lower K-Graf valve ring seals the port across the valve. When closing, the piston sweeps any impurities which may have adhered to the piston or ring. Damage to the sealing surfaces is avoided. Funcionality of the KDM piston valve is kept intact.

### *Excellent control characteristics*

KDM piston valves

The double guidance of the piston in closed position prevents fluttering and vibration in the control setting, and oscillations in the pipe. The KDM piston valve can be easily automated with double acting or simple acting KDM actuators.

### *Flexible installation*

Another distinction with generic valves, KDM piston valves can be installed in any position, included upside down, whithout affecting its performance.

## 1000 SERIES

### Model 1100
### ¼” to 2”

*232 Psi*

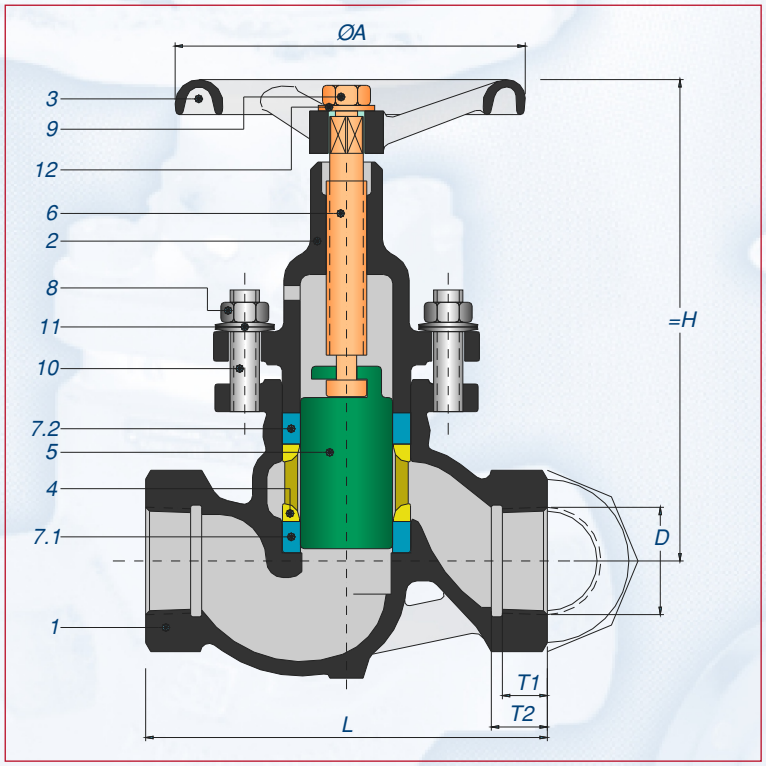


***Piston valve with female screwed ends NPT ANSI B1.20.1***
***Material: Cast iron A126 Class B***
***Sealing element : K-Graf module***

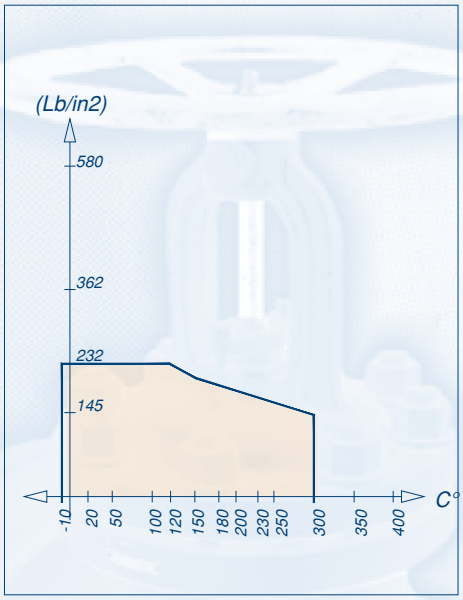


| | PART NAME | MATERIAL |
|---|---|---|
| 1 | Body | ASTM A126 Class B |
| 2 | Bonnet | ASTM A126 Class B |
| 3 | Handwheel | ASTM A126 Class B |
| 4 | Lantern bush | ASTM A126 Class B |
| 5 | Piston | AISI 304 |
| 6 | Spindle | Steel |
| 7.1 | Lower valve ring | K-Graf |
| 7.2 | Upper valve ring | K-Graf |
| 8 | bonnet nut | ASTM 194 Grade 2H |
| 9 | Handwheel nut | ASTM 194 Grade 2H |
| 10 | Bolts | ASTM A193 Grade B7 |
| 11 | Belleville washer | AISI 1075 |
| 12 | Lock washer | Carbon steel |

***CONNECTIÓN:***
*NPT ANSI B 1.20.1*

***HIDROSTATIC TEST::***
*ANSI B 16.37*

***INSPECTION AND TESTING:***
*API 598*

***TEMPERATURE:***
*-10° C a 300° C (steam)*

***PRESSURE (máx)***
*232 Psi*

*ORDERING EXAMPLE:*
*KDM-1100-1/2”-ANSI*

*Piston valves in all size may be provided with pneumatic actuators.*

| DN | A | L | STROKE | H | WEIGHT (Kgs.) | Connection NPT | T1 | T2 |
|---|---|---|---|---|---|---|---|---|
| 1/4” | 3.90 | 3.30 | 1.00 | 5.00 | 1.520 | 1/4” - 18 NPT | 0.51 | 0.62 |
| 3/8” | 3.90 | 3.30 | 1.00 | 5.00 | 1.500 | 3/8” - 18 NPT | 0.51 | 0.62 |
| 1/2” | 3.90 | 3.90 | 1.00 | 5.00 | 1.600 | 1/2” - 14 NPT | 0.53 | 0.76 |
| 3/4” | 4.70 | 4.70 | 1.20 | 5.80 | 2.500 | 3/4” - 14 NPT | 0.55 | 0.78 |
| 1” | 5.50 | 5.30 | 1.40 | 6.80 | 3.510 | 1” - 11 1/2 NPT | 0.66 | 0.94 |
| 1 1/4” | 6.30 | 6.30 | 1.60 | 7.70 | 5.900 | 1 1/4” - 11 1/2 NPT | 0.68 | 0.96 |
| 1 1/2” | 7.10 | 7.30 | 1.90 | 8.90 | 8.200 | 1 1/2” - 11 1/2 NPT | 0.68 | 0.96 |
| 2” | 7.50 | 8.60 | 2.20 | 9.80 | 12.800 | 2” - 11 1/2 NPT | 0.70 | 0.98 |

*** Overall dimension in Inches ***

*In the interest of technical progress, designs and dimensions are subject to modification.*

1000 SERIES

Model 1200

½" to 2"

232 Psi

***Piston valve with flanges***
***ANSI class 150 R.F.***
***Material: Cast iron A126 Class B***
***Sealing element : K-Graf module***

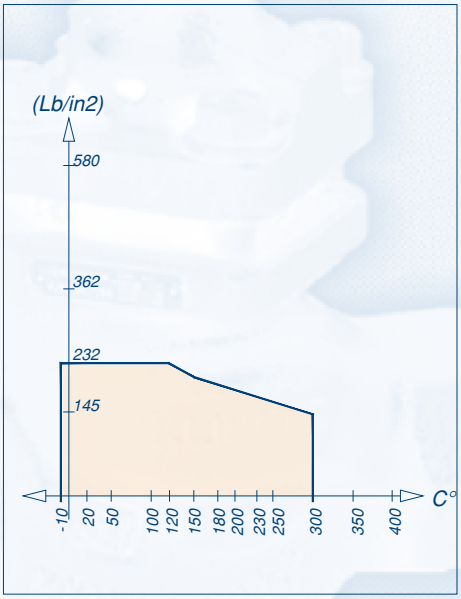


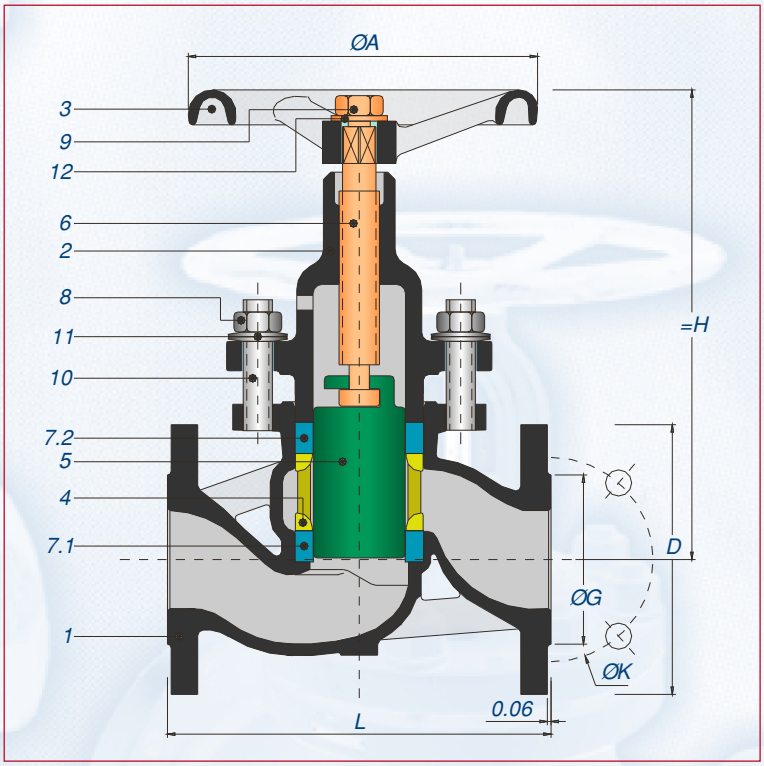


***DRILLING:***
*ANSI B16.5 Class 150 R.F.*

***OVERALL LENGTH:***
*DIN EN 558-1*

***HIDROSTATIC TEST:***
*ANSI B 16.37*

***INSPECTIÓN AND TESTING:***
*API 598.*

***TEMPERATURE:***
*-10° C a 300° C (Steam)*

***PRESSURE (máx)***
*232 Psi*

| | PART NAME | MATERIAL. |
|---|---|---|
| 1 | Body | ASTM A126 class B |
| 2 | Bonnet | ASTM A126 class B |
| 3 | Handwheel | ASTM A126 class B |
| 4 | Lantern bush | ASTM A126 class B |
| 5 | Piston | AISI 304 |
| 6 | Spindle | Steel |
| 7.1 | Lower valve ring | K- Graf |
| 7.2 | Upper valve ring | K- Graf |
| 8 | Bonnet nut | ASTM A194 Grade 2H |
| 9 | Handwheel nut | ASTM A194 Grade 2H |
| 10 | Bolts | ASTM A193 Grade B7 |
| 11 | Belleville washer | AISI 1075 |
| 12 | Lock washer | Carbon steel |

*ORDERING EXAMPLE:*
*KDM-1200-1/2"-ANSI*

*Piston valves in all size may be provided with pneumatic actuators.*

| DN | A | L | STROKE | H | WEIGHT (Kgs.) |
|---|---|---|---|---|---|
| 1/2" | 3.90 | 5.10 | 1.00 | 5.00 | 2.900 |
| 3/4" | 4.70 | 5.90 | 1.20 | 5.80 | 4.200 |
| 1" | 5.50 | 6.30 | 1.40 | 6.80 | 5.400 |
| 1 1/4" | 6.30 | 7.10 | 1.60 | 7.70 | 9.300 |
| 1 1/2" | 7.10 | 7.90 | 1.90 | 8.90 | 12.100 |
| 2" | 7.50 | 9.00 | 2.20 | 9.80 | 16.600 |

*** Overall dimensions in inches ***

*In the interest of technical progress, designs and dimensions are subject to modification.*

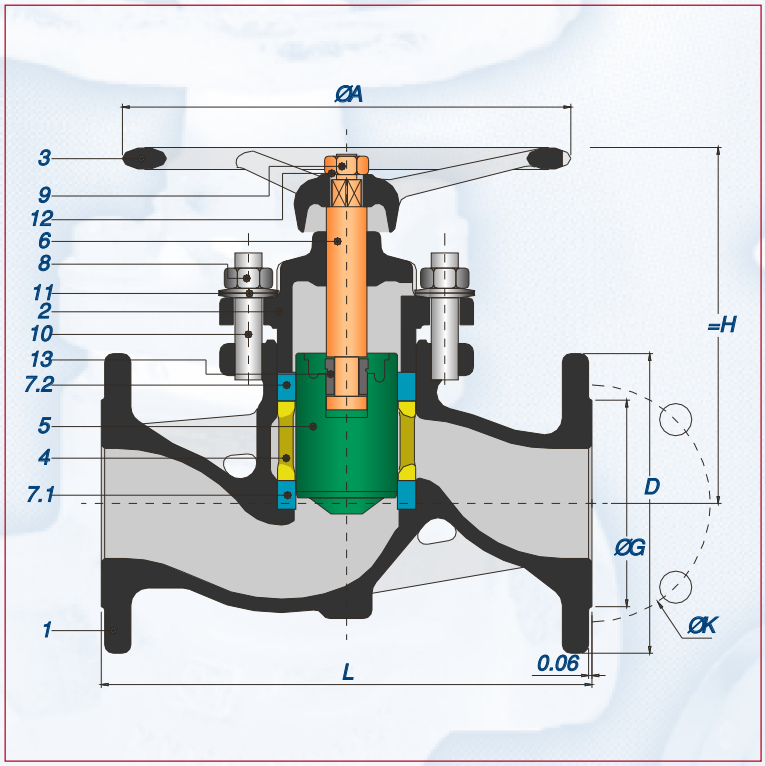


***Piston valve with flanges***
***ANSI class 150 R.F.***
***Material: Cast iron A126 Class B***
***Sealing element : K-Graf module***

1000 SERIE
Model 1200
2½" to 6"
*232 Psi*

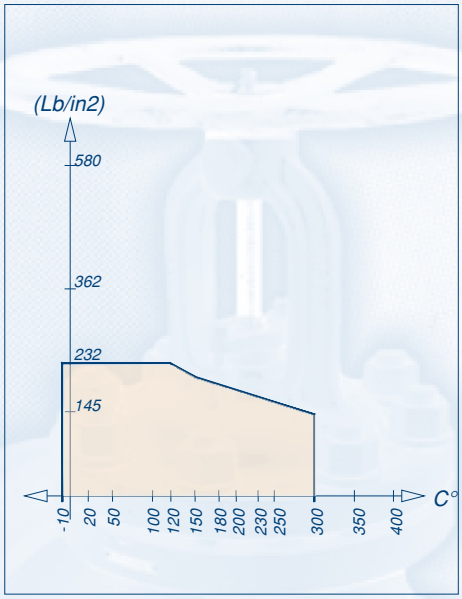


| | PART NAME | MATERIAL |
|---|---|---|
| 1 | Body | ASTM A126 class B |
| 2 | Bonnet | ASTM A126 class B |
| 3 | Handwheel | ASTM A126 class B |
| 4 | Lantern bush | ASTM A126 class B |
| 5 | Piston | AISI 304 |
| 6 | Spindle | Steel |
| 7.1 | Lower valve ring | K-Graf |
| 7.2 | Upper valve ring | k-Graf |
| 8 | Bonnet nut | ASTM A194 Grade 2H |
| 9 | Handwheel nut | ASTM A194 Grade 2H |
| 10 | Bolt | ASTM A193 Grade B7 |
| 11 | Belleville washer | AISI 1075 |
| 12 | Lock washer | Carbon steel |
| 13 | Split nut | Steel |

***DRILLING***
*ANSI B16.5 Class 150 R.F.*

***OVERALL LENGTH.***
*DIN EN 558-1*

***HIDROSTATIC TEST:***
*ANSI B 16.37*

***INSPECTIÓN AND TESTING:***
*API 598.*

***TEMPERATURE***
*-10° C a 300° C (Steam)*

***PRESSURE (máx)***
*232 Psi*

*ORDERING EXAMPLE:*
*KDM-1200- 2 1/2"-ANSI*

*Piston valves in all size may be provided with pneumatic actuators.*

| DN | A | L | STROKE | H | WEIGHT (Kgs.) |
|---|---|---|---|---|---|
| 2 1/2" | 10.40 | 11.40 | 2.00 | 7.80 | 20.400 |
| 3" | 10.40 | 12.60 | 2.30 | 8.70 | 27.700 |
| 4" | 11.80 | 13.80 | 2.90 | 10.40 | 41.300 |
| 6" | 15.70 | 17.70 | 3.80 | 13.30 | 83.000 |

*** Overall dimensions in inches ***

*In the interest of technical progress, designs and dimensions are subject to modification.*

KDM®

## 2000 SERIES

Model 2100
½" to 2"
900 Psi CWP

**Piston valve**
**with female screwed ends**
**NPT / ANSI B1.20.1, Class 150**
**Material: Cast steel A-216, Class WCB**
**Sealing element : K-Graf module**

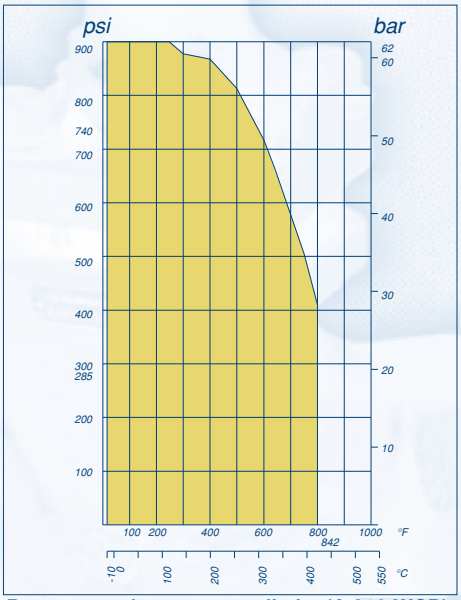


**Pressure and temperature limits (A 216-WCB)**

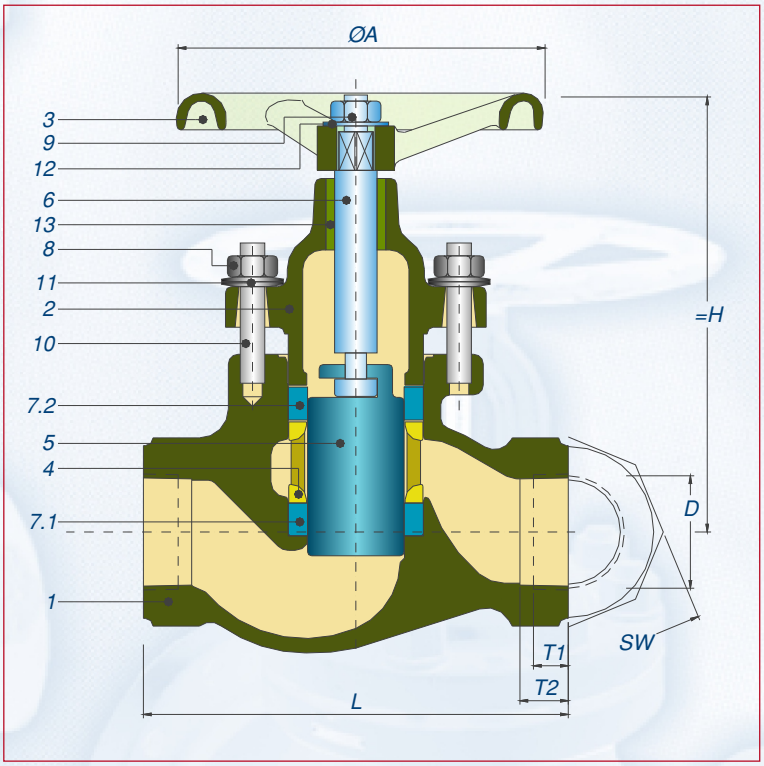


Mod. 2100
900 CWP

**CONNECTION:**
NPT ANSI B1.20.1

**HIDROSTATIC TEST:**
ANSI B 16.37

**INSPECTION AND TESTING:**
API 598

**TEMPERATURE (máx)**
427° C (WCB)

**PRESSURE (máx)**
900 Psi CWP

| | PART NAME | MATERIAL |
|---|---|---|
| 1 | Body | ASTM A216 Grade WCB |
| 2 | Bonnet | ASTM A216 Grade WCB |
| 3 | Handwheel | ASTM A126 Class B |
| 4 | Lantern bush | ASTM A126 Class B |
| 5 | Piston | AISI 304 |
| 6 | Spindle | ASTM A416 |
| 7.1 | Lower valve ring | K-Graf |
| 7.2 | Upper valve ring | K-Graf |
| 8 | Bonnet nut | ASTM 194 Grade 2H |
| 9 | Handwheel nut | ASTM 194 Grade 2H |
| 10 | Stud bolt | ASTM A193 Grade B7 |
| 11 | Belleville washer | AISI 1075 |
| 12 | Lock washer | Carbon steel |
| 13 | Threaded bush | ASTM A48 Class 40 |

Ordering example:
KDM-2100-1/2"-ANSI

Piston valves in all size may be provided with pneumatic actuators.

| Connection NPT (D) | T1 | T2 |
|---|---|---|
| 1/2" - 14 NPT | 0.53 | 0.76 |
| 3/4" - 14 NPT | 0.55 | 0.78 |
| 1" - 11 1/2 NPT | 0.66 | 0.94 |
| 1 1/2" - 11 1/2 NPT | 0.68 | 0.96 |
| 2" - 11 1/2 NPT | 0.70 | 0.98 |

| DN | A | L | STROKE | H | SW | WEIGHT (Kgs.) |
|---|---|---|---|---|---|---|
| 1/2" | 3.90 | 3.93 | 1.00 | 4.20 | 1.40 | 1.900 |
| 3/4" | 4.70 | 4.70 | 1.20 | 4.80 | 1.60 | 2.700 |
| 1" | 5.50 | 5.30 | 1.40 | 5.60 | 1.96 | 4.200 |
| 1 1/2" | 7.10 | 7.30 | 1.90 | 7.60 | 2.95 | 9.600 |
| 2" | 7.50 | 8.66 | 2.20 | 8.60 | 3.55 | 13.600 |

** Overall dimensions in inches**

In the interest of technical progress, designs and dimensions are subjet to modification.

## 2000 SERIE

Model 2200/2400
½" to 2"

570Psi

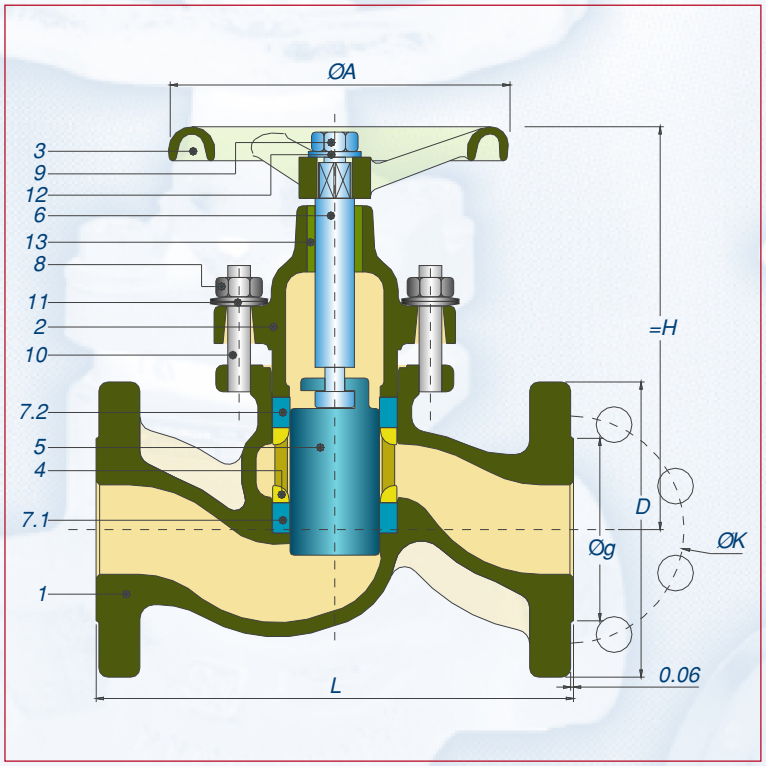


***Piston valve with flanges***
***Flanges to ANSI B16.5***
***Class 150 model 2200***
***Class 300 model 2400***
***Material: Cast steel A216 Class WCB***
***Sealing element : K-Graf module***


***Pressure and temperature limits (A 216-WCB)***

*Mod. 2200 ANSI 150* — *Mod. 2400 ANSI 300*

| | PART NAME | MATERIAL |
|---|---|---|
| 1 | Body | ASTM A216 Grade WCB |
| 2 | Bonnet | ASTM A216 Grade WCB |
| 3 | Handwheel | ASTM A126 Class B |
| 4 | Lantern bush | ASTM A126 Class B |
| 5 | Piston | AISI 304 |
| 6 | Spindle | ASTM A416 |
| 7.1 | Lower valve ring | K-Graf |
| 7.2 | Upper valve ring | K-Graf |
| 8 | Bonnet nut | ASTM 194 Grade 2H |
| 9 | Handwheel nut | ASTM 194 Grade 2H |
| 10 | Stud bolt | ASTM A193 Grade B7 |
| 11 | Belleville washer | AISI 1075 |
| 12 | Lock washer | AISI 304 |
| 13 | Threaded bush * | ASTM A48 Class 40 |

*Ordering example:*
*KDM-2200-1/2"-ANSI*
** only size 1 1/2" , 2"*

*Piston valves in all size may be provided with pneumatic actuators.*

***DRILLING:***
*ANSI B16.5 Class 150 R.F.*
*ANSI B16.5 Class 300 R.F.*

***OVERALL DIMENSIONS***
*DIN EN 558-1*

***HIDROSTATIC TEST:***
*ANSI B 16.37*

***INSPECTION AND TESTING***
*API 598*

***FIRE TEST:***
*API 6FA*

***TEMPERATURE (máx)***
*427°C*

***PRESSURE (máx)***
*570 Psi*

| DN | A | L 150 | L 300 | STROKE | H | WEIGHT (Kgs.) 150 | WEIGHT (Kgs.) 300 |
|---|---|---|---|---|---|---|---|
| 1/2" | 3.90 | 4.20 | 6.00 | 1.00 | 4.20 | 2.300 | 3.100 |
| 3/4" | 4.70 | 4.60 | 7.00 | 1.20 | 4.80 | 3.500 | 5.100 |
| 1" | 5.50 | 5.00 | 8.00 | 1.40 | 5.60 | 4.900 | 6.650 |
| 1 1/2" | 7.10 | 6.50 | 9.00 | 1.90 | 7.60 | 10.500 | 13.600 |
| 2" | 7.50 | 8.00 | 10.50 | 2.20 | 8.60 | 15.600 | 19.300 |

| DN | ØK 150 | ØK 300 | 150 # | 150 Ø | 300 # | 300 Ø |
|---|---|---|---|---|---|---|
| 1/2" | 2.38 | 2.62 | 4 | 5/8" | 4 | 5/8" |
| 3/4" | 2.75 | 3.25 | 4 | 5/8" | 4 | 3/4" |
| 1" | 3.12 | 3.50 | 4 | 5/8" | 4 | 3/4" |
| 1 1/2" | 3.88 | 4.50 | 4 | 5/8" | 4 | 7/8" |
| 2" | 4.75 | 5.00 | 4 | 3/4" | 8 | 3/4" |

*** Overall dimensions in inches***

*In the interest of technical progress, designs and dimensions are subject to modification.*

KDM®

## 2000 SERIE

Model 2200/2400
2½” to 6”

570Psi

**Piston valve with flanges**
**Flanges to ANSI B16.5**
**Class 150 model 2200**
**Class 300 model 2400**
**Material: Cast steel A216 Class WCB**
**Sealing element : K-Graf module**


**Pressure and temperature limits (A 216-WCB)**

Mod. 2200 ANSI 150 — Mod. 2400 ANSI 300

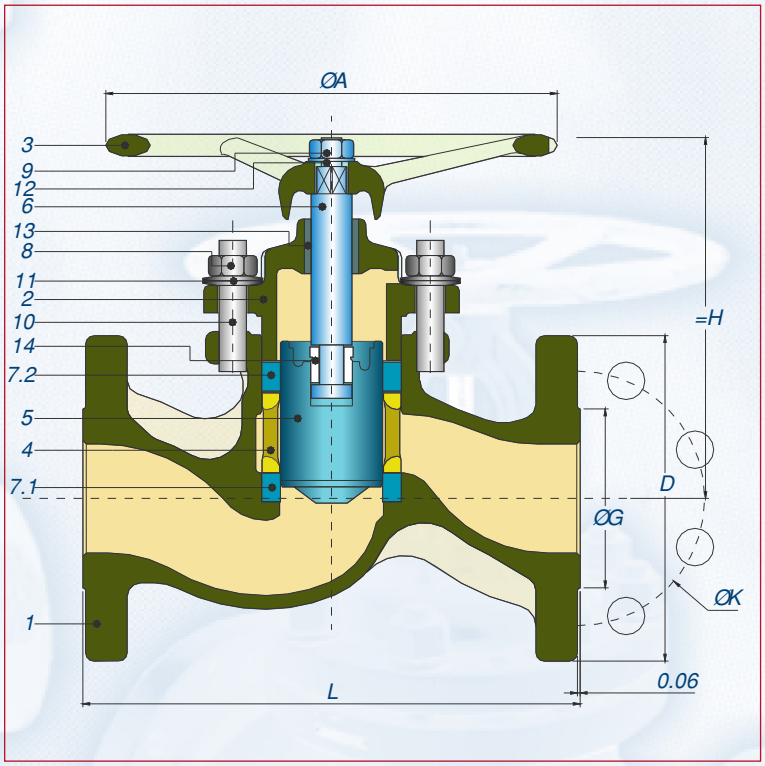


**DRILLING:**
ANSI B16.5 Class 150 R.F.
ANSI B16.5 Class 300 R.F.

**OVERALL DIMENSIONS**
DIN EN 558-1

**HIDROSTATIC TEST:**
ANSI B 16.37

**INSPECTION AND TESTING**
API 598

**FIRE TEST:**
API 6FA

**TEMPERATURE (máx)**
427°C

**PRESSURE (máx)**
570 Psi

| | PART NAME | MATERIAL |
|---|---|---|
| 1 | Body | ASTM A216 Grade WCB |
| 2 | Bonnet | ASTM A216 Grade WCB |
| 3 | Handwheel | ASTM A126 Class B |
| 4 | Lantern bush | ASTM A126 Class B |
| 5 | Piston | AISI 304 |
| 6 | Spindle | ASTM A416 |
| 7.1 | Lower valve ring | K-Graf |
| 7.2 | Upper valve ring | K-Graf |
| 8 | Bonnet nut | ASTM 194 Grade 2H |
| 9 | Handwheel nut | ASTM 194 Grade 2H |
| 10 | Stud bolt | ASTM A193 Grade B7 |
| 11 | Belleville washer | AISI 1075 |
| 12 | Lock washer | AISI 304 |
| 13 | Threaded bush * | ASTM A48 Class 40 |
| 14 | Split nut | AISI 1213 |

Ordering example:
KDM-2200-1/2”-ANSI
* only size 1 1/2” , 2”

Piston valves in all size may be provided with pneumatic actuators.

| DN | ØK | | 150 | | 300 | |
|---|---|---|---|---|---|---|
| | 150 | 300 | # | Ø | # | Ø |
| 2 1/2” | 5.50 | 5.88 | 4 | 3/4” | 8 | 7/8” |
| 3” | 6.00 | 6.62 | 4 | 3/4” | 8 | 7/8” |
| 4” | 7.50 | 7.88 | 8 | 3/4” | 8 | 7/8” |
| 6” | 9.50 | 10.62 | 8 | 7/8” | 12 | 7/8” |

| DN | A | L | | STROKE | H | WEIGHT (Kgs.) | |
|---|---|---|---|---|---|---|---|
| | | 150 | 300 | | | 150 | 300 |
| 2 1/2” | 10.40 | 8.50 | 11.50 | 1.90 | 12.40 | 25.100 | 30.700 |
| 3” | 10.40 | 9.50 | 12.50 | 2.20 | 13.20 | 35.000 | 38.900 |
| 4” | 11.80 | 11.50 | 14.00 | 2.50 | 15.30 | 53.000 | 60.500 |
| 6” | 15.70 | 16.00 | 17.50 | 3.60 | 19.60 | 102.600 | 117.500 |

** Overall dimensions in inches**

In the interest of technical progress, designs and dimensions are subject to modification.

## 2000 SERIES

Model 2300/2500
2½" to 8"

570 Psi

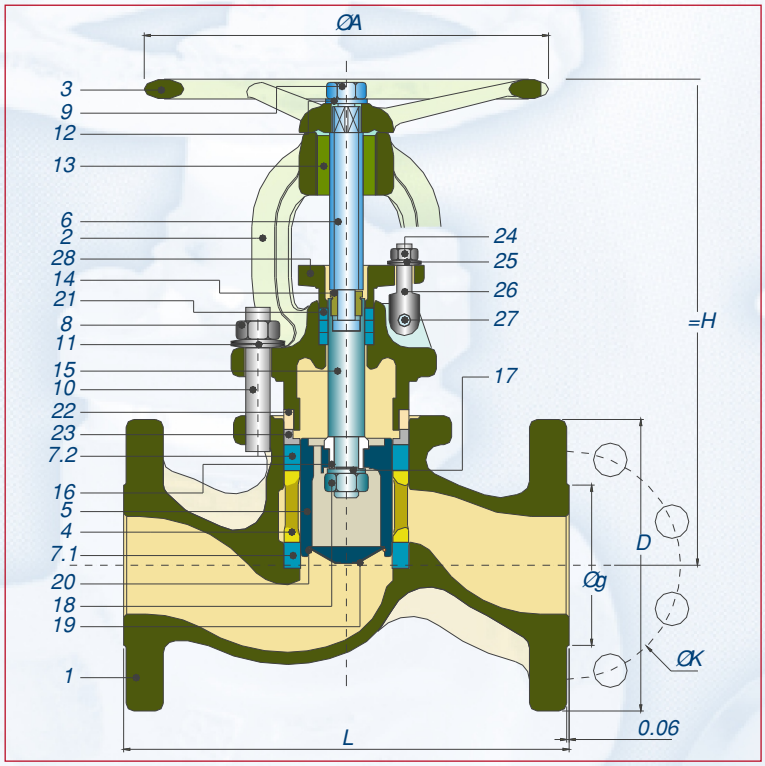


***Piston valve with flanges***
***Flanges to ANSI B16.5***
***Class 150, Model 2300***
***Class 300, Model 2500***
***Material: Cast steel A-216 Class WCB***
***Sealing element : K-Graf module***

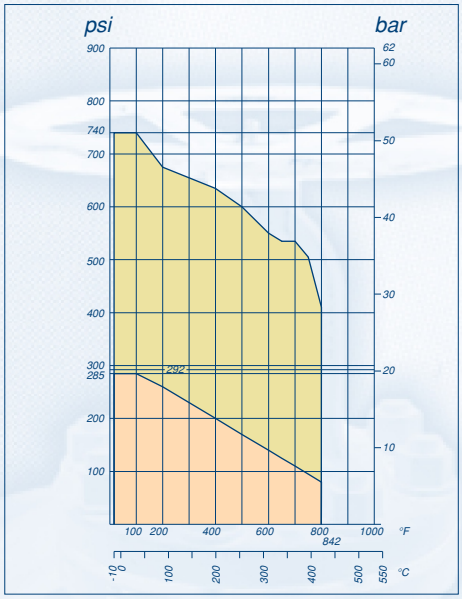


***Pressure and temperature limits (A 216-WCB)***

*Mod. 2300 ANSI 150* — *Mod. 2500 ANSI 300*

| | PART NAME | MATERIAL |
|---|---|---|
| 1 | Body | ASTM A216 Grade WCB |
| 2 | Bonnet | ASTM A216 Grade WCB |
| 3 | Handwheel | ASTM A126 Class B |
| 4 | Lantern bush | ASTM A126 Class B |
| 5 | Piston | AISI 304 |
| 6 | Spindle | ASTM A416 |
| 7.1 | Lower valve ring | K-Graf |
| 7.2 | Upper valve ring | K-Graf |
| 8 | Bonnet nut | ASTM 194 Grade 2H |
| 9 | Handwheel nut | ASTM 194 Grade 2H |
| 10 | Stud bolt | ASTM A193 Grade B7 |
| 11 | Belleville washer | AISI 1075 |
| 12 | Lock washer | Stainless steel |
| 13 | Threaded bush | ASTM A48 Class 40 |
| 14 | Split nut | AISI 1213 |
| 15 | Piston shaft | ASTM A416 |
| 16 | Back seat | ASTM A416 |
| 17 | Disc | ASTM A416 |
| 18 | Hexagon nut notched | ASTM A416 |
| 19 | Piston nose cone | AISI 316 |
| 20 | Securing ring | ASTM A416 |
| 21 | Stuffing-box ring | K-Graf |
| 22 | OT valve ring | K-Graf |
| 23 | Thrust piece | ASTM A416 |
| 24 | Hexagon nut | ASTM A194 Grade 2H |
| 25 | Belleville washer | AISI 1075 |
| 26 | Swing bolt | ASTM A193 Grade B7 |
| 27 | Notched parallel pin | ASTM A193 Grade B7 |
| 28 | Gland retainer | ASTM A216 Grade WCB |

***DRILLING:***
*ANSI B16.5 Class 150 R.F.*
*ANSI B16.5 Class 300 R.F.*

***OVERALL DIMENSIONS***
*ASME B16.10*

***HIDROSTATIC TEST:***
*ANSI B 16.37*

***INSPECTION AND TESTING***
*API 598*

***FIRE TEST:***
*API 6FA*

***TEMPERATURE (máx)***
*400°C*

***PRESSURE (máx)***
*570 Psi*

*Ordering example:*
*KDM 2300 to 2 1/2"*

*Piston valves in all sizes may be provided with pneumatic actuators.*

*** Overall dimensions in inches ***

| DN | A | L | | STROKE | H | WEIGHT (Kgs) | |
|---|---|---|---|---|---|---|---|
| | | 150 | 300 | | | 150 | 300 |
| 2 1/2" | 10.40 | 8.50 | 11.50 | 1.90 | 12.40 | 25.100 | 26.900 |
| 3" | 10.40 | 9.50 | 12.50 | 2.20 | 13.20 | 35.000 | 37.200 |
| 4" | 11.80 | 11.50 | 14.00 | 2.50 | 15.30 | 53.000 | 54.500 |
| 6" | 15.70 | 16.00 | 17.50 | 3.60 | 19.60 | 102.600 | 103.700 |
| 8" | 15.70 | 19.50 | 22.00 | 4.65 | 22.75 | 210.000 | 230.500 |

| DN | ØK | | 150 | | 300 | |
|---|---|---|---|---|---|---|
| | 150 | 300 | # | Ø | # | Ø |
| 2 1/2" | 5.50 | 5.88 | 4 | 3/4" | 8 | 7/8" |
| 3" | 6.00 | 6.62 | 4 | 3/4" | 8 | 7/8" |
| 4" | 7.50 | 7.88 | 8 | 3/4" | 8 | 7/8" |
| 6" | 9.50 | 10.62 | 8 | 7/8" | 12 | 7/8" |
| 8" | 11.75 | 13.00 | 8 | 7/8" | 12 | 1" |

*In the interest of technical progress, designs and dimensions are subject to modification.*

KDM®

## 2000 SERIES

*MODEL 2600*
*½" to 2"*

*900 Psi CWP*

***Piston valve weld end***
***socket weld to ANSI B16.11***
***Material: Cast steel A-216 Class WCB***
***Class 150 Model 2600***
***Sealing element :K-Graf module***

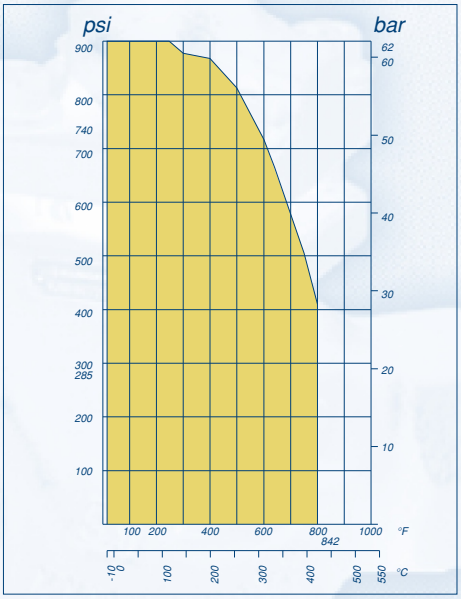


***Pressure and temperature limits (A 216-WCB)***

*Mod. 2600*
*900 CWP*

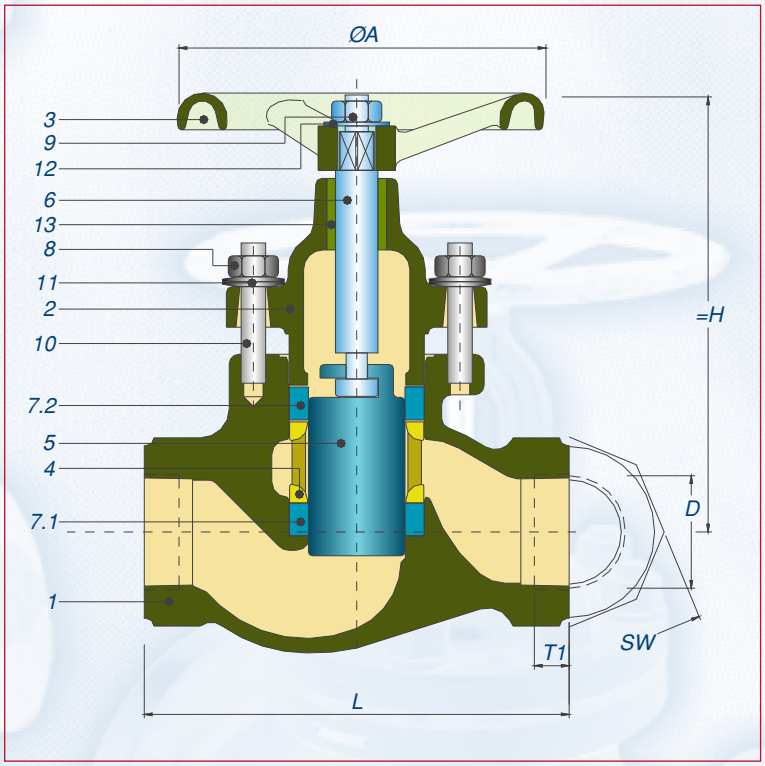


***CONNECTION:***
*Socket weld ANSI B16.11*

***HIDROSTATIC TEST:***
*ANSI B 16.37*

***INSPECTION AND TESTING:***
*API 598*

***TEMPERATURE (máx)***
*427° C (WCB)*

***PRESSURE (máx)***
*900 Psi CWP*

| | PART NAME | MATERIAL |
|---|---|---|
| 1 | Body | ASTM A216 Grade WCB |
| 2 | Bonnet | ASTM A216 Grade WCB |
| 3 | Handwheel | ASTM A126 Class B |
| 4 | Lantern bush | ASTM A126 Class B |
| 5 | Piston | AISI 304 |
| 6 | Spindle | ASTM A416 |
| 7.1 | Lower valve ring | K-Graf |
| 7.2 | Upper valve ring | K-Graf |
| 8 | Bonnet nut | ASTM 194 Grade 2H |
| 9 | Handwheel nut | ASTM 194 Grade 2H |
| 10 | Stud bolt | ASTM A193 Grade B7 |
| 11 | Belleville washer | AISI 1075 |
| 12 | Lock washer | Carbon steel |
| 13 | Threaded bush | ASTM A48 Class 40 |

*Ordering example:*
*KDM-2600-1/2"*

*Piston valves in all size may be provided with pneumatic actuators.*

| DN | Connection /socket weld (D) | T1 |
|---|---|---|
| 1/2" | 0.85 | 0.53 |
| 3/4" | 1.06 | 0.55 |
| 1" | 1.33 | 0.66 |
| 1 1/2" | 1.92 | 0.68 |
| 2" | 2.40 | 0.70 |

| DN | A | L | STROKE | H | SW | WEIGHT (Kgs.) |
|---|---|---|---|---|---|---|
| 1/2" | 3.90 | 4.00 | 1.00 | 4.20 | 1.40 | 1.700 |
| 3/4" | 4.70 | 4.75 | 1.20 | 4.80 | 1.60 | 2.500 |
| 1" | 5.50 | 5.30 | 1.40 | 5.60 | 1.96 | 4.100 |
| 1 1/2" | 7.10 | 7.25 | 1.90 | 7.60 | 2.95 | 9.500 |
| 2" | 7.50 | 8.62 | 2.20 | 8.60 | 3.55 | 13.500 |

*** Overall dimensions in inches ***

*In the interest of technical progress, designs and dimensions are subjet to modification.*

## 2000 SERIES

Model 2700
½" to 2"

*900 Psi CWP*

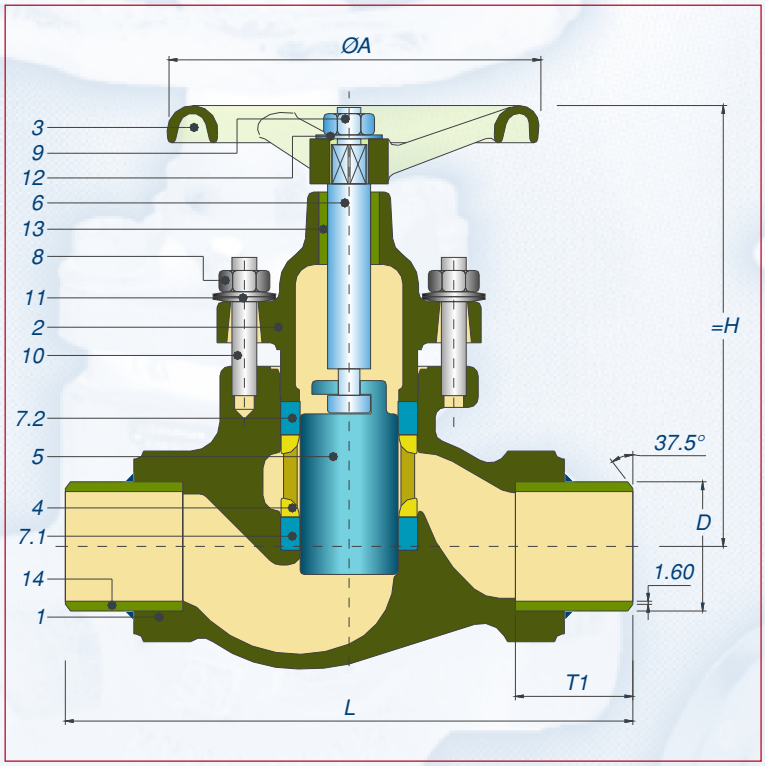


***Piston valve weld***
***Connetión butt weld to ANSI B16.25***
***Material: Cast steel A-216 Class WCB***
***Sealing element : K-Graf module***

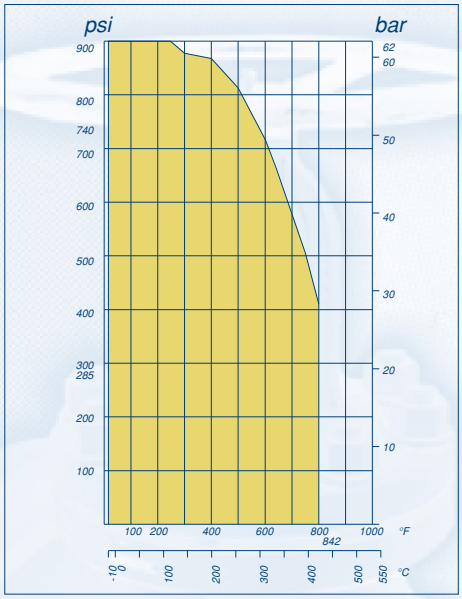


***Pressure and temperature limits (A 216-WCB)***

| | PART NAME | MATERIAL |
|---|---|---|
| 1 | Body | ASTM A216 Gr WCB |
| 2 | Bonnet | ASTM A216 Gr WCB |
| 3 | Handwheel | ASTM A126 Class B |
| 4 | Lantern bush | ASTM A126 Class B |
| 5 | Piston | AISI 304 |
| 6 | Spindle | ASTM A416 |
| 7.1 | Lower valve ring | K-Graf |
| 7.2 | Upper valve ring | K-Graf |
| 8 | Bonnet nut | ASTM 194 Gr 2H |
| 9 | Handwheel nut | ASTM 194 Gr 2H |
| 10 | Stud bolt | ASTM A193 GR B7 |
| 11 | Belleville washer | AISI 1075 |
| 12 | Lock washer | Carbon steel |
| 13 | Threaded bush | ASTM A48 Class 40 |
| 14 | Tube | Cast steel |

*Ordering example:*
*KDM-2700-1/2"*

*Piston valves in all size may be provided with pneumatic actuators.*

***CONNECTION:***
*Butt weld ANSI B16.25*

***ALL DIMENSIONS***
*ANSI B16.10 Clase 300*

***HIDROSTATIC TEST***
*ANSI B 16.37*

***INSPECTION AND TESTING:***
*API 598*

***FIRE TEST:***
*API 6FA*

***TEMPERATURE (máx)***
*427° C (WCB)*

***PRESSURE (máx)***
*900 Psi CWP*

| DN | A | L | STROKE | H | WEIGHT (Kgs.) |
|---|---|---|---|---|---|
| 1/2" | 3.90 | 6.00 | 1.00 | 4.20 | 2.000 |
| 3/4" | 4.70 | 7.00 | 1.20 | 4.80 | 2.800 |
| 1" | 5.50 | 8.00 | 1.40 | 5.60 | 4.500 |
| 1 1/2" | 7.10 | 9.00 | 1.90 | 7.60 | 9.800 |
| 2" | 7.50 | 10.50 | 2.20 | 8.60 | 13.800 |

| DN | Connetión butt weld (D) | T1 |
|---|---|---|
| 1/2" | 0.83 | 1.41 |
| 3/4" | 1.05 | 1.65 |
| 1" | 1.33 | 1.85 |
| 1 1/2" | 1.74 | 1.37 |
| 2" | 2.37 | 1.55 |

*** Overall dimensions in inches ***

*In the interest of technical progress, designs and dimensions are subjet to modification.*

# 3000 SERIES

Model 3100
½" to 2"

900 Psi CWP

**Piston valve**
**with female screwed ends**
**Material: Stainless steel A351-CF8M**
**Sealing element: K-Graf module**

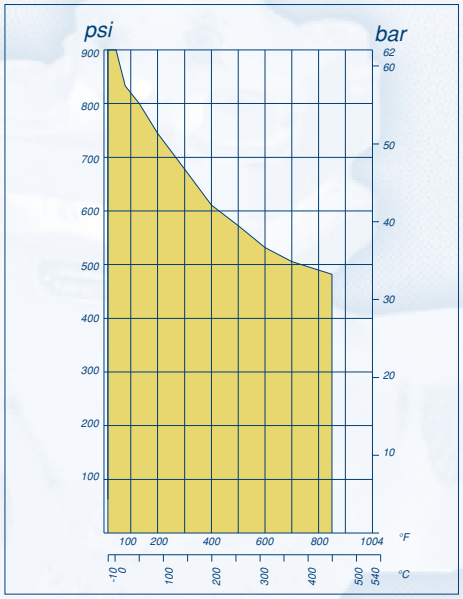


**Pressure and temperature limits (A 351 CF8M)**

Mod. 3100
900 CWP

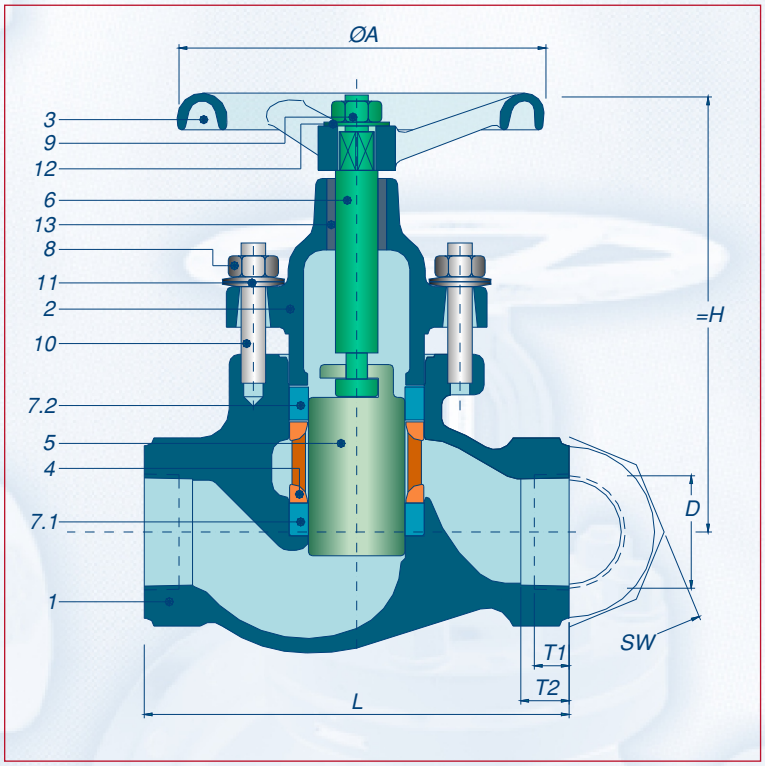


| | PART NAME | MATERIAL |
|---|---|---|
| 1 | Body | ASTM A351 Grade CF8M |
| 2 | Bonnet | ASTM A351 Grade CF8M |
| 3 | Handwheel | ASTM A351 Grade CF8M |
| 4 | Lantern bush | ASTM A351 Grade CF8M |
| 5 | Piston | AISI 316 |
| 6 | Spindle | AISI 316 |
| 7.1 | Lower valve ring | K-Graf |
| 7.2 | Upper valve ring | K-Graf |
| 8 | Bonnet nut | ASTM 194 Grade 6F |
| 9 | Handwheel nut | ASTM 194 Grade 6F |
| 10 | Stud bolt | ASTM A193 Grade B8 |
| 11 | Belleville washer | AISI 316 |
| 12 | Lock washer | Stainless steel |
| 13 | Threaded bush | AISI 304 |

**CONNETIÓN:**
NPT ANSI B1.20.1

**HIDROSTATIC TEST:**
ANSI B 16.37

**INSPECTIÓN AND TESTING:**
API 598

**FIRE TEST:**
API 6FA

**TEMPERATURE (máx)**
454° C (CF8M)

**PRESSURE (máx)**
900 Psi CWP

Ordering example:
KDM-3100-1/2"

Piston valves in all size may be provided with pneumatic actuators.

| Connectión NPT (D) | T1 | T2 |
|---|---|---|
| 1/2" - 14 NPT | 0.53 | 0.76 |
| 3/4" - 14 NPT | 0.55 | 0.78 |
| 1" - 11 1/2 NPT | 0.66 | 0.94 |
| 1 1/2" - 11 1/2 NPT | 0.68 | 0.96 |
| 2" - 11 1/2 NPT | 0.70 | 0.98 |

| DN | A | L | STROKE | H | SW | WEIGHT (Kgs.) |
|---|---|---|---|---|---|---|
| 1/2" | 3.90 | 3.93 | 1.00 | 4.20 | 1.40 | 1.80 |
| 3/4" | 4.70 | 4.70 | 1.20 | 4.80 | 1.60 | 2.90 |
| 1" | 5.50 | 5.30 | 1.40 | 5.60 | 1.96 | 4.00 |
| 1 1/2" | 7.10 | 7.30 | 1.90 | 7.60 | 2.95 | 9.80 |
| 2" | 7.50 | 8.66 | 2.20 | 8.60 | 3.55 | 15.80 |

** Overall dimensions in inches **

In the interest of technical progress, designs and dimensions are subject to modification.

## 3000 SERIES

Model 3200/3400
½" to 2"

720 Psi

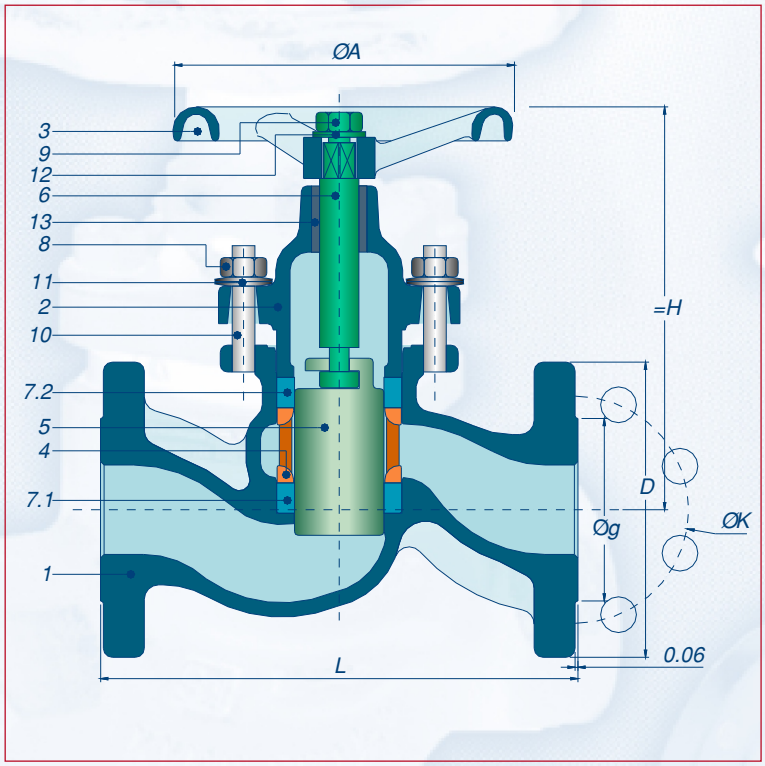


***Piston valves with flanges***
***flanges to ANSI B16.5***
***Class 150 model 3200***
***Class 300 model 3400***
***Material: Stainless steel- A351- CF8M***
***Sealing element : K-Graf module***


***Pressure and temperature limits (A 351 CF8M)***

*Mod. 3200 ANSI 150* — *Mod. 3400 ANSI 300*

| | PART NAME | MATERIAL |
|---|---|---|
| 1 | Body | ASTM A351 Grade CF8M |
| 2 | Bonnet | ASTM A351 Grade CF8M |
| 3 | Handwheel | ASTM A351 Grade CF8M |
| 4 | Lantern | ASTM A351 Grade CF8M |
| 5 | Piston | AISI 316 |
| 6 | Spindle | ASTM A316 |
| 7.1 | Lower valve ring | K- Graf |
| 7.2 | Upper valve ring | K- Graf |
| 8 | Bonnet nut | ASTM 194 Grade 6F |
| 9 | Handwheel nut | ASTM 194 Grade 6F |
| 10 | Stud bolt | ASTM A193 Grade B8 |
| 11 | Belleville washer | AISI 1075 |
| 12 | Lock washer | Stainless steel |
| 13 | Threaded bush * | AISI 304 |

*Ordering example:*
*KDM 3200-1/2"*
** size only 1 1/2" , 2"*

*Piston valves in all sizesmay be provided with pneumatic actuators.*

***DRILLING:***
*ANSI B 16.5 Clase 150 R.F.*
*ANSI B 16.5 Clase 300 R.F.*

***OVERALL DIMENSIONS:***
*DIN EN 558-1*

***HIDROSTÁTIC TEST:***
*ANSI B 16.37*

***INSPECTIÓN AND TESTING:***
*API 598*

***FIRE TEST:***
*API 6FA*

***TEMPERATURE (máx)***
*538° C*

***PRESSURE (máx)***
*720 Psi*

| DN | A | L 150 | L 300 | STROKE | H | WEIGHT (Kgs.) 150 | WEIGHT (Kgs.) 300 |
|---|---|---|---|---|---|---|---|
| 1/2" | 3.90 | 4.20 | 6.00 | 1.00 | 4.20 | 2.50 | 3.50 |
| 3/4" | 4.70 | 4.60 | 7.00 | 1.20 | 4.80 | 3.50 | 5.00 |
| 1" | 5.50 | 5.00 | 8.00 | 1.40 | 5.60 | 5.00 | 7.00 |
| 1 1/2" | 7.10 | 6.50 | 9.00 | 1.90 | 7.60 | 10.60 | 13.80 |
| 2" | 7.50 | 8.00 | 10.50 | 2.20 | 8.60 | 16.50 | 20.20 |

| DN | ØK 150 | ØK 300 | 150 # | 150 Ø | 300 # | 300 Ø |
|---|---|---|---|---|---|---|
| 1/2" | 2.38 | 2.62 | 4 | 5/8" | 4 | 5/8" |
| 3/4" | 2.75 | 3.25 | 4 | 5/8" | 4 | 3/4" |
| 1" | 3.12 | 3.50 | 4 | 5/8" | 4 | 3/4" |
| 1 1/2" | 3.88 | 4.50 | 4 | 5/8" | 4 | 7/8" |
| 2" | 4.75 | 5.00 | 4 | 3/4" | 8 | 3/4" |

*** Overall dimensions in inches ***
*In the interest of technical progress, designs and dimensions are subject to modification.*

# 3000 SERIES

Model 3300/3500
½" to 2"

720 Psi

***Piston valves with flanges***
***Flanges to ANSI B16.5***
***Class 150 model 3300***
***Class 300 model 3500***
***Material: Stainless steel A 351-CF8M***
***Sealing element: K-Graf Module***


***Pressure and temperature limits (A 351 CF8M)***

*Mod. 3200 ANSI 150* — *Mod. 3400 ANSI 300*

***DRILLING:***
*ANSI B 16.5 Clase 150 R.F.*
*ANSI B 16.5 Clase 300 R.F.*

***OVERALL DIMENSIONS***
*DIN EN 558-1*

***HIDROSTÁTIC TEST:***
*ANSI B 16.37*

***INSPECTIÓN AND TESTING:***
*API 598*

***FIRE TEST:***
*API 6FA*

***TEMPERATURE (máx)***
*538° C*

***PRESSURE (máx)***
*720 Psi*

*Ordering example*
*KDM 3300-1/2"*

*Piston valves in all sizes may be provided with pneumatic actuators.*

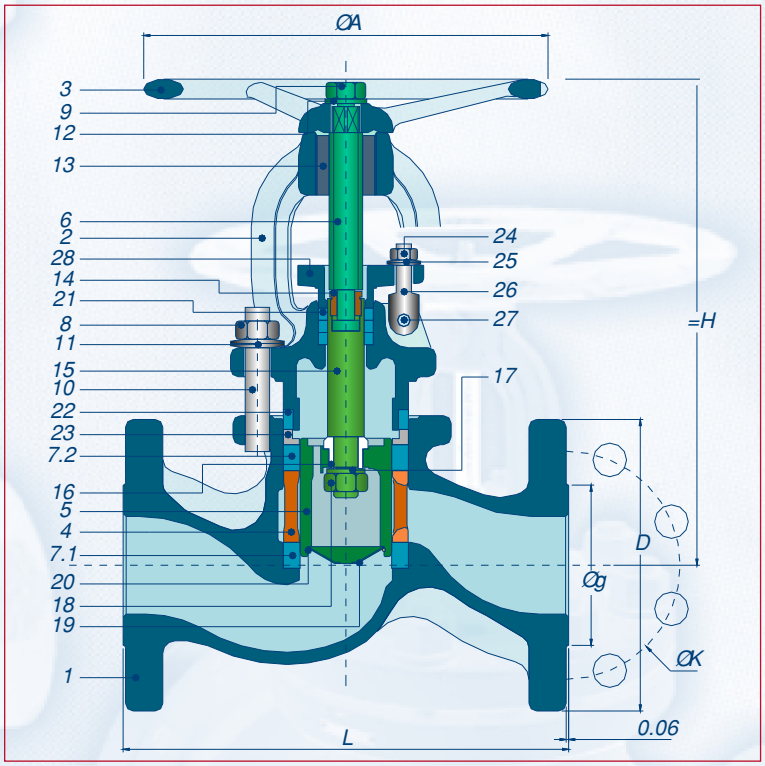


| | PART NAME | MATERIAL |
|---|---|---|
| 1 | Body | ASTM A351 Grade CF8M |
| 2 | Bonnet | ASTM A351 Grade CF8M |
| 3 | Handwheel | ASTM A351 Grade CF8M |
| 4 | Lantern bush | ASTM A351 Grade CF8M |
| 5 | Piston | AISI 316 |
| 6 | Spindle | AISI 316 |
| 7.1 | Lower valve ring | K-Graf |
| 7.2 | Upper valve ring | K-Graf |
| 8 | Bonnet nut | ASTM 194 Grade 6F |
| 9 | Handwheel nut | ASTM 194 Grade 6F |
| 10 | Stud bolt | ASTM A193 Grade B8 |
| 11 | Belleville washer | AISI 316 |
| 12 | Lock washer | Stainless steel |
| 13 | Threaded bush | AISI 304 |
| 14 | Split nut | AISI 316 |
| 15 | Piston shaft | AISI 316 |
| 16 | Back seat | AISI 316 |
| 17 | Disc | AISI 316 |
| 18 | Hexagon nut notched | AISI 316 |
| 19 | Piston nose cone | AISI 316 |
| 20 | Securing ring | ASTM A416 |
| 21 | Stuffing-box ring | K-Graf |
| 22 | OT valve ring | K-Graf |
| 23 | Thrust piece | ASTM A416 |
| 24 | Hexagon nut | ASTM A194 Grade 6F |
| 25 | Belleville washer | AISI 316 |
| 26 | Swing bolt | ASTM A193 Grade B8 |
| 27 | Notched parallel pin | ASTM A193 Grade B8 |
| 28 | Gland retainer | ASTM A351 Grade CF8M |

| DN | ØK | | 150 | | 300 | |
|---|---|---|---|---|---|---|
| | 150 | 300 | # | Ø | # | Ø |
| 2 1/2" | 5.50 | 5.88 | 4 | 3/4" | 8 | 7/8" |
| 3" | 6.00 | 6.62 | 4 | 3/4" | 8 | 7/8" |
| 4" | 7.50 | 7.88 | 8 | 3/4" | 8 | 7/8" |
| 6" | 9.50 | 10.62 | 8 | 7/8" | 12 | 7/8" |
| 8" | 11.75 | 13.00 | 8 | 7/8" | 12 | 1" |

| DN | A | L | | STROKE | H | WEIGHT (Kgs.) | |
|---|---|---|---|---|---|---|---|
| | | 150 | 300 | | | 150 | 300 |
| 2 1/2" | 10.40 | 8.50 | 11.50 | 1.90 | 12.40 | 25.10 | 30.60 |
| 3" | 10.40 | 9.50 | 12.50 | 2.20 | 13.20 | 35.00 | 39.00 |
| 4" | 11.80 | 11.50 | 14.00 | 2.50 | 15.30 | 53.00 | 60.50 |
| 6" | 15.70 | 16.00 | 17.50 | 3.60 | 19.60 | 105.50 | 117.50 |
| 8" | 15.70 | 19.50 | 22.00 | 4.65 | 22.75 | 196.00 | 218.00 |

*** Overall dimensions in inches***

*In the interest of technical progress, designs and dimensions are subject to modification.*

## 3000 SERIES

*Model 3600*
*½" to 2"*

*900 Psi CWP*

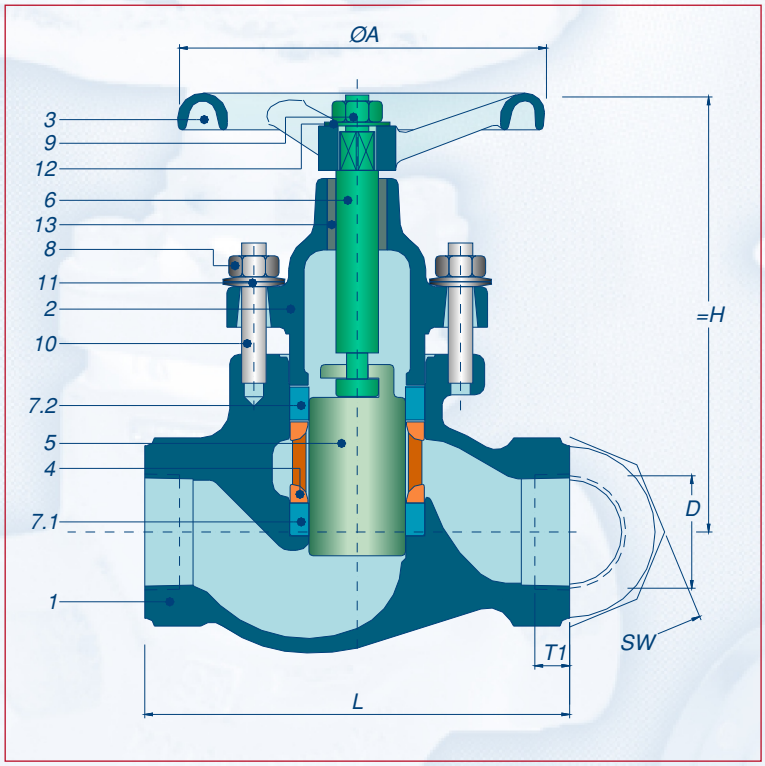


***Piston valve weld***
***Socket weld to ANSI B16.11***
***Class 150 Model 3600***
***Material: Stainles Steel A351-CF8M***
***Sealing element : K-Graf module***

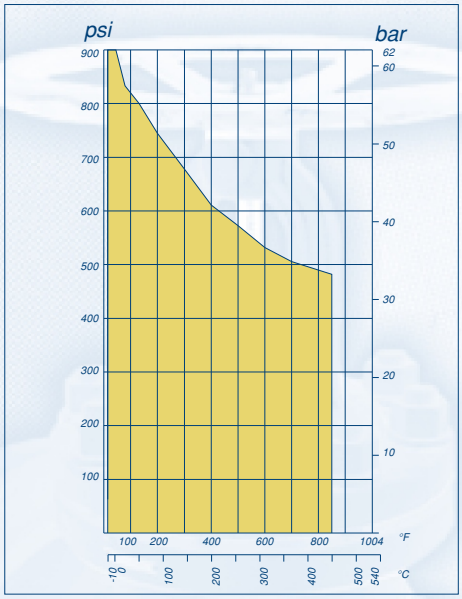


***Pressure and temperature limits (A 351 CF8M)***

*Mod. 3600*
*900 CWP*

| | PART NAME | MATERIAL |
|---|---|---|
| 1 | Body | ASTM A351 Grade CF8M |
| 2 | Bonnet | ASTM A351 Grade CF8M |
| 3 | Handwheel | ASTM A351 Grade CF8M |
| 4 | Lantern bush | ASTM A351 Grade CF8M |
| 5 | Piston | AISI 316 |
| 6 | Spindle | AISI 316 |
| 7.1 | Lower valve ring | K-Graf |
| 7.2 | Upper valve ring | K-Graf |
| 8 | Bonnet nut | ASTM 194 Grade 6F |
| 9 | Handwheel nut | ASTM 194 Grade 6F |
| 10 | Stud bolt | ASTM A193 Grade B8 |
| 11 | Belleville washer | AISI 316 |
| 12 | Lock washer | Stainless steel |
| 13 | Threaded bush | AISI 304 |

*Ordering example*
*KDM 3600-1 1/2"*

*Piston valves in all sizes may be provided with pneumatic actuators.*

***CONNECTIÓN:***
*Socket weld ANSI B16.11*

***HIDROSTATIC TEST:***
*ANSI B 16.37*

***INSPECTIÓN AND TESTING:***
*API 598*

***FIRE TEST:***
*API 6FA*

***TEMPERATURE(máx)***
*454° C (CF8M)*

***PRESSURE (máx)***
*900 Psi CWP*

| DN | A | L | STROKE | H | SW | WEIGHT (Kgs.) |
|---|---|---|---|---|---|---|
| 1/2" | 3.90 | 4.00 | 1.00 | 4.20 | 1.40 | 1.700 |
| 3/4" | 4.70 | 4.75 | 1.20 | 4.80 | 1.60 | 2.500 |
| 1" | 5.50 | 5.30 | 1.40 | 5.60 | 1.96 | 4.100 |
| 1 1/2" | 7.10 | 7.25 | 1.90 | 7.60 | 2.95 | 9.500 |
| 2" | 7.50 | 8.62 | 2.20 | 8.60 | 3.55 | 13.500 |

| DN | Connection socket weld (D) | T1 |
|---|---|---|
| 1/2" | 0.85 | 0.53 |
| 3/4" | 1.06 | 0.55 |
| 1" | 1.33 | 0.66 |
| 1 1/2" | 1.92 | 0.68 |
| 2" | 2.40 | 0.70 |

*** Overall dimensions in inches***

*In the interest of technical progress, designs and dimensions are subject to modification.*

# Flanges ANSI B-16.5

**ANSI 150**

**ANSI 300**

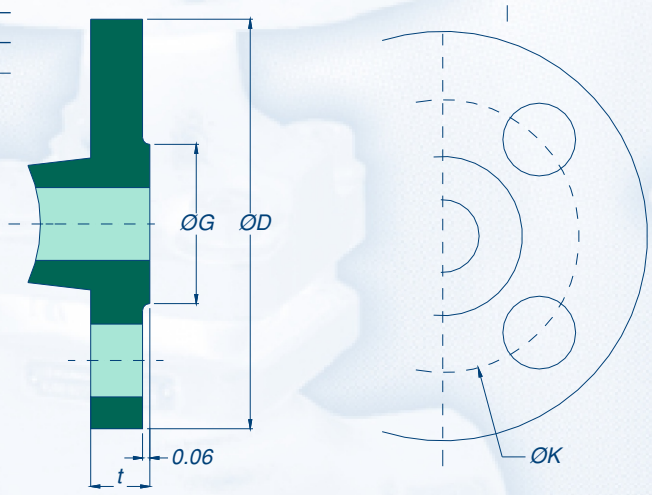


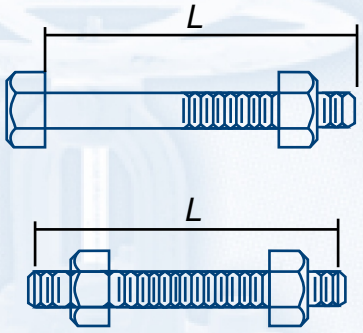


| FLANGES ANSI 150 | | | | | BOLT | | | |
|---|---|---|---|---|---|---|---|---|
| DN | ØD | t | ØK | ØG | NUMBER | DIAM. | DRILL | LONG (L) |
| 1/2” | 3.50 | 0.43 | 2.38 | 1.37 | 4 | 1/2” | 5/8” | 2.25 |
| 3/4” | 3.88 | 0.43 | 2.75 | 1.68 | 4 | 1/2” | 5/8” | 2.50 |
| 1” | 4.25 | 0.43 | 3.12 | 2.00 | 4 | 1/2” | 5/8” | 2.50 |
| 1 1/4” | 4.62 | 0.50 | 3.50 | 2.50 | 4 | 1/2” | 5/8” | 2.75 |
| 1 1/2” | 5.00 | 0.56 | 3.88 | 2.87 | 4 | 1/2” | 5/8” | 2.75 |
| 2” | 6.00 | 0.62 | 4.75 | 3.62 | 4 | 5/8” | 3/4” | 3.25 |
| 2 1/2” | 7.00 | 0.68 | 5.50 | 4.12 | 4 | 5/8” | 3/4” | 3.50 |
| 3” | 7.50 | 0.75 | 6.00 | 5.00 | 4 | 5/8” | 3/4” | 3.50 |
| 4” | 9.00 | 0.93 | 7.50 | 6.18 | 8 | 5/8” | 3/4” | 3.50 |
| 6” | 11.00 | 1.00 | 9.50 | 8.50 | 8 | 3/4” | 7/8” | 4.00 |
| 8” | 13.50 | 1.12 | 11.75 | 10.62 | 8 | 3/4” | 7/8” | 4.25 |
| 10” | 16.00 | 1.18 | 14.25 | 12.75 | 12 | 7/8” | 1” | 4.50 |
| 12” | 19.00 | 1.25 | 17.00 | 15.00 | 12 | 7/8” | 1” | 4.75 |
| 14” | 21.00 | 1.37 | 18.75 | 16.25 | 12 | 1” | 1 1/8” | 5.25 |
| 16” | 23.50 | 1.43 | 21.25 | 18.50 | 16 | 1” | 1 1/8” | 5.25 |
| 18” | 25.00 | 1.56 | 22.75 | 21.00 | 16 | 1 1/8” | 1 1/4” | 5.75 |
| 20” | 27.50 | 1.68 | 25.00 | 23.00 | 20 | 1 1/8” | 1 1/4” | 6.25 |

| FLANGES ANSI 300 | | | | | BOLT | | | |
|---|---|---|---|---|---|---|---|---|
| DN | ØD | t | ØK | ØG | NUMBER | DIAM. | DRILL | LONG (L) |
| 1/2” | 3.75 | 0.56 | 2.62 | 1.37 | 4 | 1/2” | 5/8” | 2.50 |
| 3/4” | 4.62 | 0.62 | 3.25 | 1.68 | 4 | 5/8” | 3/4” | 3.00 |
| 1” | 4.88 | 0.68 | 3.50 | 2.00 | 4 | 5/8” | 3/4” | 3.00 |
| 1 1/4” | 5.25 | 0.75 | 3.88 | 2.50 | 4 | 5/8” | 3/4” | 3.25 |
| 1 1/2” | 6.12 | 0.81 | 4.50 | 2.87 | 4 | 3/4” | 7/8” | 3.50 |
| 2” | 6.50 | 0.87 | 5.00 | 3.62 | 8 | 5/8” | 3/4” | 3.50 |
| 2 1/2” | 7.50 | 1.00 | 5.88 | 4.12 | 8 | 3/4” | 7/8” | 4.00 |
| 3” | 8.25 | 1.12 | 6.62 | 5.00 | 8 | 3/4” | 7/8” | 4.25 |
| 4” | 10.00 | 1.25 | 7.88 | 6.18 | 8 | 3/4” | 7/8” | 4.50 |
| 6” | 12.50 | 1.43 | 10.62 | 8.50 | 12 | 3/4” | 7/8” | 4.75 |
| 8” | 15.00 | 1.62 | 13.00 | 10.62 | 12 | 7/8” | 1” | 5.50 |
| 10” | 17.50 | 1.87 | 15.25 | 12.75 | 16 | 1” | 1 1/8” | 6.25 |
| 12” | 20.50 | 2.00 | 17.75 | 15.00 | 16 | 1 1/8” | 1 1/4” | 6.75 |
| 14” | 23.00 | 2.12 | 20.25 | 16.25 | 20 | 1 1/8” | 1 1/4” | 7.00 |
| 16” | 25.50 | 2.25 | 22.50 | 18.50 | 20 | 1 1/4” | 1 3/8” | 7.50 |
| 18” | 28.00 | 2.37 | 24.75 | 21.00 | 24 | 1 1/4” | 1 3/8” | 7.75 |
| 20” | 30.50 | 2.50 | 27.00 | 23.00 | 24 | 1 1/4” | 1 3/8” | 8.00 |

*** Overall dimensions in inches ***

*In the interest of technical progress, designs and dimensions are subject to modification.*

## VALVE FLOW COEFFICIENTS = Cv

| Travel Percentage | | 10 | 20 | 30 | 40 | 50 | 60 | 70 | 80 | 90 | 100 |
|---|---|---|---|---|---|---|---|---|---|---|---|
| DN | Inherent Characteristic | RANGE Cv (gpm) | | | | | | | | | |
| 1/2” | lineal | 0.5 | 1.1 | 1.7 | 2.4 | 3.1 | 3.8 | 4.4 | 4.7 | 4.9 | 5.0 |
| | =% | 0.09 | 0.17 | 0.30 | 0.48 | 0.77 | 1.21 | 1.83 | 2.67 | 3.76 | 5.0 |
| 3/4” | lineal | 0.8 | 1.8 | 2.90 | 4.2 | 5.3 | 6.5 | 7.6 | 8.2 | 8.7 | 9.0 |
| | =% | 0.16 | 0.31 | 0.52 | 0.86 | 1.39 | 2.18 | 3.29 | 4.80 | 6.76 | 9.0 |
| 1” | lineal | 1.2 | 2.7 | 4.4 | 6.4 | 8.2 | 10 | 11 | 12 | 13 | 14 |
| | =% | 0.25 | 0.48 | 0.81 | 1.34 | 2.16 | 3.39 | 5.12 | 7.46 | 10.6 | 14 |
| 1 1/2” | lineal | 2.8 | 6.6 | 11 | 16 | 20 | 24 | 29 | 32 | 34 | 36 |
| | =% | 0.64 | 1.24 | 2.09 | 3.44 | 5.56 | 8.71 | 13.1 | 19.2 | 27.1 | 36 |
| 2” | lineal | 4.0 | 9.9 | 17 | 25 | 32 | 39 | 45 | 50 | 53 | 55 |
| | =% | 0.97 | 1.9 | 3.2 | 5.3 | 8.5 | 13.3 | 20.1 | 29.3 | 41.3 | 55 |
| 2 1/2” | lineal | 10 | 20 | 30 | 40 | 50 | 60 | 70 | 80 | 90 | 100 |
| | =% | 1.76 | 3.45 | 5.80 | 9.60 | 16 | 24 | 36 | 53 | 75 | 100 |
| 3” | lineal | 14 | 28 | 43 | 57 | 71 | 85 | 99 | 114 | 128 | 142 |
| | =% | 2.50 | 4.90 | 8.30 | 14 | 22 | 35 | 52 | 76 | 107 | 142 |
| 4” | lineal | 21 | 43 | 64 | 85 | 107 | 128 | 149 | 170 | 192 | 213 |
| | =% | 3.80 | 7.40 | 12 | 20 | 33 | 52 | 78 | 114 | 160 | 213 |
| 6” | lineal | 43 | 85 | 128 | 170 | 213 | 255 | 298 | 340 | 383 | 425 |
| | =% | 7.50 | 15 | 25 | 41 | 65 | 103 | 155 | 226 | 319 | 425 |
| 8” | lineal | 68 | 135 | 202 | 269 | 336 | 403 | 470 | 538 | 605 | 672 |
| | =% | 12 | 23 | 39 | 64 | 104 | 163 | 246 | 358 | 505 | 672 |

## ACTUATORS RANGE

| SIZE = DN | | | 1/2” | 3/4” | 1” | 1 1/2” | 2” | 2 1/2” | 3” | 4” | 6” | 8” |
|---|---|---|---|---|---|---|---|---|---|---|---|---|
| STROKE | | | 25 | 30 | 30 | 45 | 45 | 65 | 65 | 65 | 90 | 90 |
| Cv MAX. | | | 5.0 | 9.0 | 14 | 36 | 55 | 100 | 142 | 210 | 309 | 670 |
| Actuator Type | Actuating pressure (Bar) | | ACTUATORS RANGE | | | | | | | | | |
| | Mín. | Máx. | | | | | | | | | | |
| NC - NA - DA 01 | 4.0 | 6.0 | 40 | 30 | 20 | - | - | - | - | - | - | - |
| NC - NA - DA 02 | 3.0 | 6.0 | - | 40 | 40 | - | - | - | - | - | - | - |
| NC - NA - DA 03 | 4.0 | 6.0 | - | - | - | 25 | 20 | - | - | - | - | - |
| NC - NA - DA 04 | 3.0 | 6.0 | - | - | - | 40 | 40 | - | - | - | - | - |
| NC - NA - DA 05 | 4.0 | 6.0 | - | - | - | - | - | 20 | 20 | 10 | - | - |
| NC - NA - DA 06 | 3.0 | 6.0 | - | - | - | - | - | 40 | 40 | 40 | - | - |
| NC - NA - DA 07 | 4.0 | 6.0 | - | - | - | - | - | - | - | - | 20 | 20 |

KDM®

# CHEMICAL
## RESISTANCE

*The recomendations given here are intended to help in selecting suitable material and valve types. No guarantee can be given perfomance and service life of products depend on a series of factors on which the manufacturer has no influence. Special regulations must be observed. Please contact us in cases of doubt.*
*Solid media listed in the table, are to be understood as aqueos solutions or suspensions.*

***Explanation of symbols***

*for metalic materials of constrccion*
*0 = Practically resistant*
*loss in weight less than 2.4 gm/m²/day*
*1 = fairly resistant*
*loss in weight 2.4 -24 gm/m²/day*
*2 = low resisttance*
*loss in weight more than 24-72 gm/m²/day*
*3 = non-resistant*
*los in weight more than 72 gm/m²/day*
*- = not tested or not costomary*

*for valve rings:*
*x = suitable*
*- = not suitable*

*Abbreviations:*
*Bp = boiling point*
*Satd = Saturade*
*Hyd. Sol = hydrous solution*
*Conc = Concentrated*

| Fluid | Chemical formula | Temperature and concentration | | Sealing element | | Materials | | | |
|---|---|---|---|---|---|---|---|---|---|
| | | % | °C | K-Graf Module | PTFE | A 126 30B | A216 WCB | A351 CF8M | |
| Linseed oil | | | 20 | X | X | -- | -- | 0 | Aceite de linaza |
| Linseed oil | | | 100 | X | X | -- | -- | 0 | Aceite de linaza |
| Paraffin oil | | | 20 | X | X | 0 | 0 | 0 | Aceite de parafina (queroseno) |
| Oil | | | | X | X | 0 | 0 | 0 | Aceite de transferencia de calor |
| Oils (minerals, lubricants) | | | 20 | X | X | 0 | 0 | 0 | Aceite (minerales, Lubricantes) |
| Oil(vegetable) | | | 20 | X | X | 0 | 0 | 0 | Aceites (vegetales) |
| Silicon oil | | | | X | X | 0 | 0 | 0 | Aceites de silicon |
| Copper acetate Hyd. Sol. | $(CH_3COO)_2Cu$ | | 20 | X | X | 0 | 0 | 0 | Acetato de cobre Hyd. Sol. |
| Copper acetate Hyd. Sol. | $(CH_3COO)_2Cu$ | | BP | X | X | 2 | 2 | 0 | Acetato de cobre Hyd. Sol. |
| Ethyl acetate | $CH_3COOC_2H_5$ | | | X | X | 0 | 0 | 0 | Acetato de etilo |
| Plumb acetate | $Pb(CH_3COO)_2$ | 100 | BP | X | X | 3 | 3 | 2 | Acetato de plomo |
| Potassium acetate | $CH_3COOK$ | | BP | X | X | 0 | 0 | 0 | Acetato de potasio |
| Sodium acetate | $CH_3COONa$ | | | X | X | 1 | 1 | 0 | Acetato de sodio |
| Acetylene | $C_2H_2$ | | | -- | X | 0 | 0 | 0 | Acetileno |
| Acetone | $CH_3COCH_3$ | | 20 | X | X | 0 | 0 | 0 | Acetona |
| Methyl ethyl ketones (MEK) | $CH_3COC_2H_5$ | | BP | X | X | 1 | 1 | 0 | Acetona Metil etilica (MEK) |
| Acetic acid | $CH_3COOH$ | 10 | 20 | X | X | 2 | 2 | 0 | Acido acético |
| Acetic acid | $CH_3COOH$ | 10 | BP | X | X | 2 | 2 | 0 | Acido acético |
| Acetic acid | $CH_3COOH$ | 50 | 20 | X | X | 3 | 2 | 0 | Acido acético |
| Acetic acid | $CH_3COOH$ | 50 | BP | X | X | 3 | 2 | 1 | Acido acético |
| Acetic acid | $CH_3COOH$ | 80 | 20 | X | X | 3 | 2 | 1 | Acido acético |
| Acetic acid | $CH_3COOH$ | 80 | BP | X | X | 3 | 2 | 1 | Acido acético |
| Acetic acid, glacial | $CH_3COOH$ | | 20 | X | X | 3 | 2 | 0 | Acido acético, glacial |
| Arcenic acid | $H_3AsO_4$ | | | X | X | 2 | 2 | 0 | Acido arsénico |
| Boric acid | $H_3BO_3$ | 4 | 20 | X | X | 2 | 2 | 0 | Acido bórico |
| Boric acid | $H_3BO_3$ | 4 | 100 | X | X | 2 | 2 | 0 | Acido bórico |
| Boric acid | $H_3BO_3$ | 100 | 100 | X | X | 2 | 2 | 0 | Acido bórico |
| Citric acid | $(CH_2COOH)_2C(OH)COOH$ | | 20 | X | X | 3 | 3 | 0 | Ácido citrico |
| Citric acid | $(CH_2COOH)_2C(OH)COOH$ | | BP | X | X | 3 | 3 | 0 | Ácido citrico |
| Clorhidic acid | HCl | 0.20 | 20 | X | X | 3 | 3 | 0 | Ácido clorhidrico |
| Clorhidic acid | HCl | 0.20 | 50 | X | X | 3 | 3 | 1 | Ácido clorhidrico |
| Clorhidic acid | HCl | 1 | 20 | X | X | 3 | 3 | 1 | Ácido clorhidrico |
| Clorisulfonic acid | $HOSO_2Cl$ | 10 | 20 | X | X | 1 | 1 | 3 | Acido clorisulfonico |
| Chromic acid | $H_2CrO_4$ | 10 | 20 | X | X | 1 | 0 | 0 | Ácido cromico |
| Chromic acid | $H_2CrO_4$ | 10 | BP | -- | X | - | - | 0 | Ácido cromico |
| Chromic acid | $H_2CrO_4$ | 50 | 20 | -- | X | 0 | 0 | 0 | Ácido cromico |
| Esteraic acid | $C_{17}H_{35}COOH$ | | | X | X | 2 | 2 | 0 | Ácido esteárico |

## CHEMICAL RESISTANCE

| Fluid | Chemical formula | Temperature and concentration % | Temperature and concentration °C | Sealing element K-Graf Module | Sealing element PTFE | Materials A 126 30B | Materials A216 WCB | Materials A351 CF8M | |
|---|---|---|---|---|---|---|---|---|---|
| Phormic acid | HCOOH | 10 | 20 | X | X | 3 | 3 | 0 | Acido fórmico |
| Phormic acid | HCOOH | 10 | 100 | X | X | 3 | 3 | 1 | Acido fórmico |
| Phormic acid | HCOOH | 100 | 20 | X | X | 3 | 3 | 0 | Acido fórmico |
| Phormic acid | HCOOH | 100 | 100 | X | X | 3 | 3 | 1 | Acido fórmico |
| Phosphoric acid | $H_3PO_4$ | 10 | 20 | X | X | 2 | 2 | 0 | Ácido fosfórico |
| Phosphoric acid | $H_3PO_4$ | 10 | BP | X | X | 3 | 3 | 0 | Ácido fosfórico |
| Phosphoric acid | $H_3PO_4$ | 50 | 20 | X | X | 2 | 2 | 0 | Ácido fosfórico |
| Phosphoric acid | $H_3PO_4$ | 50 | BP | X | X | 3 | 3 | 1 | Ácido fosfórico |
| Phosphoric acid | $H_3PO_4$ | 80 | 20 | X | X | 3 | 3 | 0 | Ácido fosfórico |
| Phosphoric acid | $H_3PO_4$ | 80 | BP | X | X | 3 | 3 | 2 | Ácido fosfórico |
| Nitric acid | $HNO_3$ | 10 | 20 | X | X | 3 | 3 | 0 | Acido nitrico |
| Nitric acid | $HNO_3$ | 10 | BP | X | X | 3 | 3 | 0 | Acido nitrico |
| Nitric acid | $HNO_3$ | 40 | 20 | X | X | 3 | 3 | 0 | Acido nitrico |
| Nitric acid | $HNO_3$ | 40 | BP | X | X | 3 | 3 | 0 | Acido nitrico |
| Nitric acid | $HNO_3$ | Conc. | 20 | X | X | 3 | 3 | 0 | Acido nitrico |
| Nitric acid | $HNO_3$ | Conc. | BP | X | X | 3 | 2 | 1 | Acido nitrico |
| Oleic acid | $C_{17}H_{33}COOH$ | | | - | X | 0 | 0 | 0 | Ácido oleico |
| Oxalic acid | COOHCOOH | | 20 | - | X | 2 | 2 | 0 | Ácido oxálico |
| Salicylic acid | $C_6H_4OHCOOH$ | | 20 | X | X | 2 | 2 | 0 | Ácido salisilico |
| Sulfuric acid | $H_2SO_4$ | 1 | 20 | X | X | 3 | 3 | 0 | Ácido sulfúrico |
| Sulfuric acid | $H_2SO_4$ | 10 | 20 | X | X | 3 | 3 | 0 | Ácido sulfúrico |
| Sulfuric acid | $H_2SO_4$ | 90 | 20 | X | X | 1 | 1 | 0 | Ácido sulfúrico |
| Sulfuric acid | $H_2SO_4$ | Conc. | 20 | X | X | 0 | 0 | 0 | Ácido sulfúrico |
| Sulfurous acid (cold) satd. | $H_2SO_3$ | | 20 | X | X | 3 | 3 | 0 | Ácido sulfuroso (frio) satd. |
| Tannic acid | $C_{76}H_{52}O_{46}$ | 10 | 20 | X | X | 2 | 2 | 0 | Ácido Tánico |
| Tannic acid | $C_{76}H_{52}O_{46}$ | 10 | BP | X | X | 3 | 3 | 0 | Ácido Tánico |
| Tannic acid | $C_{76}H_{52}O_{46}$ | 50 | 20 | X | X | 2 | 2 | 0 | Ácido Tánico |
| Tartaric acid | $(CHOHCOOH)_2$ | | 20 | X | X | 2 | 2 | 0 | Ácido tartarico |
| Fatty acids | | | | X | X | 1 | 1 | 0 | Ácidos grasos arriba de C6 |
| Water | H2O | | 20 | X | X | 0 | 0 | 0 | Agua (dulce y potable) |
| Water-sea | | | 20 | X | X | 3 | 3 | 0 | Agua de mar |
| Water-sea | | | BP | X | X | 3 | 3 | 0 | Agua de mar |
| Air-dry | | | | X | X | 0 | 0 | 0 | Aire, seco |
| Alcohol -butyl | $C_4H_9OH$ | | | X | X | 0 | 0 | 0 | Alcohol butilico |
| Alcohol-ethyl | $C_2H_5OH$ | | | X | X | 0 | 0 | 0 | Alcohol etílico |
| Alcohol-methy | $CH_3OH$ | | 20 | X | X | 0 (2 | 0 (2 | 0 | Alcohol metilico |
| Starsh | | | | X | X | 2 | 2 | 0 | Almidón |
| Coal Tar | | | 20 | X | X | 1 | 1 | 0 | Alquitran |
| Alum | $KAl(SO_4)_2$ | 10 | 20 | X | X | -- | -- | 0 | Alumbre |
| Alum | $KAl(SO_4)_2$ | 10 | 100 | X | X | -- | -- | 0 | Alumbre |
| Aniline | $C_6H_5NH_2$ | | | X | X | 0 | 0 | 0 | Anilina |
| Asphalt | | | | X | X | -- | -- | 0 | Asfalto |
| Sugar | | | 20 | X | X | 1 | 1 | 0 | Azucar |
| Sugar | | | 80 | X | X | 1 | 1 | 0 | Azucar |
| Benzene | $C_6H_6$ | | | X | X | -- | -- | 1 | Benceno |
| Ammonium bicarbonate | $(NH_4)HCO_3$ | | | X | X | 0 | 0 | 0 | Bicarbonato de amonio |
| Potassium bichromate | $K_2Cr_2O_7$ | 25 | 20 | X | X | 0 | 0 | 0 | Bicromato de potasio |
| Potassium bichromate | $K_2Cr_2O_7$ | | BP | -- | X | 2 | 2 | 0 | Bicromato de potasio |
| Calcium bisulfite | $Ca(HSO_3)_2$ | | 20 | -- | X | 2 | 3 | 0 | Bisulfito de calcio |
| Calcium bisulfite | $Ca(HSO_3)_2$ | | 200 | -- | X | 2 | 3 | 0 | Bisulfito de calcio |

KDM®

# CHEMICAL
## RESISTENCE

| Fluid | Chemical formula | Temperature and concentration | | Sealing element | | Materials | | | |
|---|---|---|---|---|---|---|---|---|---|
| | | % | °C | K-Graf Module | PTFE | A 126 30B | A216 WCB | A351 CF8M | |
| Borax | $Na_2B_4O_{71}0H_2O$ | | | X | X | -- | -- | 0 | Bórax |
| Butane | $C_4H_{10}$ | | | X | X | 0 | 0 | 0 | Butano |
| Butyl acetate | $CH_3COOC_4H_9$ | | | X | X | 0 | 0 | 0 | Butilacetato |
| Slaked lime | $Ca(OH)_2$ | | 20 | X | X | 0 | 0 | 0 | Cal apagada |
| Slaked lime | $Ca(OH)_2$ | | BP | X | X | 0 | 0 | 0 | Cal apagada |
| Ammonium carbonate | $(NH_4)_2CO_3$ | | BP | X | X | 2 | 2 | 0 | Carbonato de amonio |
| Potassium carbonate | $K_2CO_3$ | 50 | 20 | X | X | 1 | 0 | 0 | Carbonato de potasio |
| Potassium carbonate (potasa) | $K_2CO_3$ | | BP | X | X | 1 | 0 | 0 | Carbonato de potasio (potasa) |
| Sodium carbonate | $Na_2CO_3$ | | BP | X | X | 1 | 1 | 0 | Carbonato de sodio (solución) |
| Sodium carbonate(solution, cold) | $Na_2CO_3$ | | 20 | X | X | 0 | 0 | 0 | Carbonato de sodio (solución, Frío) |
| Beer | | | | X | X | 3 | 3 | 0 | Cerveza |
| Potassium cyanide | KCN | 5 | 20 | X | X | 1 | 1 | 0 | Cianuro de potasio |
| Clophen T64 | | | | X | X | 0 | 0 | 0 | Clophen T64 |
| Aluminium chlorate | $Al(ClO_3)_3$ | | | X | X | -- | -- | 0 | Clorato de aluminio |
| Potassium chlorate (100°, satd.) | $KClO_3$ | | BP | -- | X | 2 | 2 | 0 | Clorato de potasio (100°, satd.) |
| Chlorine (wet) | $Cl_2$ | | 80 | X | X | 0 | 0 | 0 | Clorina, humeda |
| Chlorine (dry) | $Cl_2$ | | 20 | X | X | 0 | 0 | 0 | Clorina, seca |
| Chloroform | $CHCl_3$ | | 20 | X | X | 0 | 0 | 0 | Cloroformo |
| Chloroform | $CHCl_3$ | | BP | X | X | 0 | 0 | 0 | Cloroformo |
| Ammonium chloride | $NH_4Cl$ | 5 | 20 | X | X | 1 | 1 | 0 | Cloruro de amonio |
| Ammonium chloride | $NH_4Cl$ | 10 | 20 | X | X | 1 | 1 | 0 | Cloruro de amonio |
| Ammonium chloride | $NH_4Cl$ | 10 | 100 | X | X | 3 | 3 | 0 | Cloruro de amonio |
| Ammonium chloride | $NH_4Cl$ | 50 | 20 | X | X | 1 | 1 | 0 | Cloruro de amonio |
| Calsium chloride | $CaCl_2$ | | 20 | X | X | 1 | 1 | 0 | Cloruro de calcio |
| Calsium chloride | $CaCl_2$ | | 100 | X | X | 2 | 2 | 1 | Cloruro de calcio |
| Ethylene chloride | $(CH_2Cl)_2$ | 20 | | X | X | 0 | 0 | 0 | Cloruro de etileno |
| Manganese chloride | $MnCl_2$ | | 20 | X | X | 2 | 2 | 0 | Cloruro de manganeso |
| Manganese chloride | $MnCl_2$ | | BP | X | X | 2 | 2 | 0 | Cloruro de manganeso |
| Mercuric chloride (II) | $HgCl_2$ | | 20 | X | X | 3 | 3 | 0 | Cloruro de mercurio (II) |
| Methylene chloride | $CH_2Cl_2$ | | 20 | X | X | 1 | 1 | 0 | Cloruro de metileno |
| Methylene chloride | $CH_2Cl_2$ | | BP | X | X | 1 | 1 | 0 | Cloruro de metileno |
| Coloring, organic acid | | | 20 | X | X | -- | -- | 0 | Colorante, ácido orgánico |
| Coloring, organic acid | | | BP | X | X | -- | -- | 0 | Colorante, ácido orgánico |
| Coloring, sulphuric acid | $H_2SO_4$ less than0.3% | | BP | X | X | -- | -- | 0 | Colorante, ácido sulfúrico débil |
| Coloring , sulphuric acid | $H_2SO_4$ less than0.3% | | 20 | X | X | -- | -- | 0 | Colorante, ácido sulfúrico fuerte |
| Coloring, sulphuric acid | $H_2SO_4$ more than 0.3% | | BP | X | X | -- | -- | 1 | Colorante, ácido sulfúrico fuerte |
| Coloring, alcaline or neutral | | | 20 | X | X | -- | -- | 0 | Colorante, alcalino o neutro |
| Coloring, alcaline or neutral | | | BP | X | X | -- | -- | 0 | Colorante, alcalino o neutro |
| Creosote | | | 20 | -- | X | -- | -- | 0 | Creosota |
| Creosote | | | BP | -- | X | -- | -- | 0 | Creosota |
| Diesel | | | 20 | X | X | 0 | 0 | 0 | Diesel |
| Ammonium diphosfate | $(NH_2)_2HPO_4$ | | | X | X | 1 | 1 | 0 | Difosfato de amonio |
| Sulfur dioxide | $So_2$ | | 20 | X | X | 3 | 3 | 0 | Dióxido de azufre |
| Carbon dioxide, dry | $Co_2$ | Up than 150 | | X | X | 0 | 0 | 0 | Dióxido de carbono, seco |
| Carbon dioxide, dry | $Co_2$ | | 400 | X | X | 0 | 0 | 0 | Dióxido de carbono, seco |
| Diphyl | | | | X | X | 0 | 0 | 0 | Diphyl |
| Carbon disulfure | $Cs_2$ | | 20 | X | X | 0 | 0 | 0 | Disulfuro de carbono |
| Ethane | $C_2H_6$ | | | X | X | 0 | 0 | 0 | Etano |
| Ethylic ether | $Al(OC_2H_5)_2$ | | BP | -- | X | 1 | 1 | 0 | Éter etílico |
| Ethylene | $C_2H_4$ | | BP | -- | X | 0 | 0 | 0 | Etileno |

## CHEMICAL RESISTENCE

| Fluid | Chemical formula | Temperature and concentration % | Temperature and concentration °C | Saling element K-Graf module PTFE | Saling element A 126 30B | materials A216 WCB | materials A351 CF8M | |
|---|---|---|---|---|---|---|---|---|
| Aluminum ethylene | $Al(OC_2H_5)_2$ | | | X | X | 0 | 0 | 0 | Etileno de aluminio |
| Phenol | $C_6H_5OH$ | | 100 | X | X | 2 | 2 | 0 | Fenol |
| Aluminum fluoride | $AlF_3$ | | | X | X | 0 | 0 | 3 | Fluoruro de aluminio |
| Formaldehyde | HCHO | 40 | 20 | X | X | 3 | 3 | 0 | Formaldehido |
| Formaldehyde | HCHO | 40 | BP | X | X | 3 | 3 | 0 | Formaldehido |
| Freón 12 | | | | X | X | 0 | 0 | 0 | Freón 12 |
| Hydrogen chloride (gas) dry | Hcl | | 20 | X | X | 1 | 1 | 1 | Gas cloruro de hidrógeno, seco |
| Hydrogen chloride (gas) dry | Hcl | | 100 | X | X | 1 | 1 | 2 | Gas cloruro de hidrógeno, seco |
| Natural gas | | | 20 | X | X | 0 | 0 | 0 | Gas natural |
| City gas | | | | X | X | 0 | 0 | 0 | Gas para iluminación (gas de ciudad) |
| Hydrogen sulfide, gas (wet) | $H_2S$ | | 20 | X | X | -- | -- | 0 | Gas sulfuro de hidrogeno, humedo |
| Hydrogen sulfide, gas (dry) | $H_2S$ | | 20 | X | X | -- | -- | 0 | Gas sulfuro de hidrogeno, seco |
| Glycerine | $(CH_2OH)_2CHOH$ | | 20 | X | X | 2 | 2 | 0 | Glicerina |
| Glycerine | $(CH_2OH)_2CHOH$ | | 100 | X | X | 2 | 2 | 0 | Glicerina |
| Hydrogen | $H_2$ | | 20 | X | X | 0 | 0 | 0 | Hidrógeno |
| Potassium Hydrogen (100°, sat.) | $COOH(CHOH)_2COOK$ | | BP | X | X | -- | -- | 1 | Hidrogeno de potasio (100°, sat.) |
| Potassium hydrogen, acid | $COOH(CHOH)_2COOK$ | | 20 | X | X | -- | -- | 0 | Hidrogeno de potasio ácido |
| Ammonium hydroxide | $NH_4OH$ | 10 | 20 | X | X | 0 | 0 | 0 | Hidróxido de amonio |
| Ammonium hyadroxide | $NH_4OH$ | 10 | 100 | X | X | 0 | 0 | 0 | Hidróxido de amonio |
| Calcium hydroxide | $Ca(OH)_2$ | | 80 | X | X | 0 | 0 | 0 | Hidróxido de calcio |
| Potassium hydroxide | KOH | 25 | 20 | X | X | 0 | 0 | 0 | Hidróxido de potasio (potasa caustica) |
| Potassium Hydroxide | KOH | 25 | BP | X | X | -- | -- | 0 | Hidróxido de potasio (potasa caustica) |
| Potassium hydroxide | KOH | 50 | 20 | X | X | 0 | 0 | 0 | Hidróxido de potasio (potasa caustica) |
| Potassium hydroxide | KOH | 50 | BP | X | X | 3 | 3 | 0 | Hidróxido de potasio (potasa caustica) |
| Sodium hydroxide | NaOH | 20 | 20 | X | X | 0 | 0 | 0 | Hidróxido de sodio (sosa cáustica) |
| Sodium hydroxide | NaOH | 20 | BP | X | X | -- | -- | 0 | Hidróxido de sodio (sosa cáustica) |
| Sodium hydroxide | NaOH | 35 | 20 | X | X | 0 | 0 | 0 | Hidróxido de sodio (sosa cáustica) |
| Sodium hydroxide | NaOH | 35 | BP | X | X | 3 | 3 | 0 | Hidróxido de sodio (sosa cáustica) |
| Calcium hypochlorito | $Ca(ClO)_2$ | | | -- | X | 2 | 2 | 1 | Hipoclorito de calcio |
| Calcium hypochlorito | KOCl | | 20 | X | X | 2 | 2 | 1 | Hipoclorito de potasio |
| Potassium hypochlorito | KOCl | | 20 | X | X | 2 | 2 | 1 | Hipoclorito de potasio |
| Potassium lodide | KI | | BP | X | X | 2 | 2 | 0 | Ioduro de potasio |
| Potassium lodide | KI | | 20 | X | X | 1 | 1 | 0 | Ioduro de potasio |
| milk | | | | X | X | 2 | 2 | 0 | Leche |
| Mercury | Hg | | 20 | X | X | 1 | 1 | 0 | Mercurio |
| Ammonium nitrate | $NH_4NO_3$ | | BP | X | X | 2 | 2 | 0 | Nitrato de amonio |
| Mercury nitrate (II) | $Hg(NO_3)_2$ | | 20 | X | X | 3 | 3 | 0 | Nitrato de mercurio (II) |
| Potassium nitrate | $KNO_3$ | | 20 | -- | X | 0 | 0 | 0 | Nitrato de potasio |
| Potassium nitrate | $KNO_3$ | | BP | -- | X | 2 | 2 | 0 | Nitrato de potasio |
| Potassium nitrate | $KNO_3$ | | | X | X | 0 | 0 | 0 | Nitrato de potasio |
| Nitrogen | $N_2$ | | | X | X | 0 | 0 | 0 | Nitrogeno |
| Aluminum oxide | $Al_2O_3$ | | | X | X | 0 | 0 | 0 | Oxido de aluminio |
| Oxigen | O2 | | 20 | X | X | 0 | 0 | 0 | Oxígeno |
| Acetate pentil | $CH_3COOC_5H_{11}$ | | | X | X | 0 | 0 | 0 | Pentil acetato |
| Potassium permanganate | $KMnO_4$ | | 20 | X | X | 0 | 0 | 0 | Permanganato de potasio |
| Potassium permanganate | $KMnO_4$ | | BP | -- | X | 3 | 3 | 0 | Permanganato de potasio |
| Hydrogen peroxide | $H_2O_2$ | | | X | X | 3 | 3 | 0 | Peróxido de hidrógeno |
| Peróxido de hidrógeno | H2O2 | | 50 | -- | X | 3 | 3 | 0 | Peróxido de hidrógeno |
| Petróleum (gasoline) | | | 20 | X | X | 0 | 0 | 0 | Petróleo (gasolina) |

# CHEMICAL RESISTENCE

| Fluid | Chemical formula | Temperature and concentration | | Sealing element | | Materiale | | | |
|---|---|---|---|---|---|---|---|---|---|
| | | % | °C | K-Graf Module | PTFE | A 126 30B | A216 WCB | A351 CF8M | |
| Propane | $C_3H_8$ | | 20 | X | X | 0 | 0 | 0 | Propano |
| Brine | NaCl | | 20 | X | X | 3 | 3 | 1 | Salmuera |
| Sodium silicate | $K_2SiO_3Na_2SiO_3$ | | 20 | X | X | 0 | 0 | 0 | Silicato de sodio |
| Detergent solution | | | | X | X | 0 | 0 | 0 | Solución detergente |
| Diazotizing solution | | | 20 | X | X | 2 | 2 | 1 | Solucion diazotizing (ácido debil) |
| Diazotizing solution | | | 80 | X | X | 2 | 2 | 1 | Solucion diazotizing (ácido debil) |
| Sulfide solution | $Ca(HSO_3)_2$ | | 20 | X | X | -- | -- | 0 | Soluciones de sulfito |
| Sulfide solution | $Ca(HSO_3)_2$ | | 80 | X | X | -- | -- | 0 | Soluciones de sulfito |
| Milk serum | | | 20 | X | X | -- | -- | 0 | Suero de leche |
| Potassium chromium sulphate | $KCr(SO_4)_{212}H_2O$ | | 20 | X | X | -- | -- | 0 | Sulfato cromico de potasio |
| Potasium chromium sulphate | $KCr(SO_4)_{212}H_2O$ | | BP | X | X | -- | -- | 3 | Sulfato cromico de potasio |
| Amonium sulfate | $(NH_4)_2SO_4$ | | BP | X | X | 3 | 3 | 0 | Sulfato de amonio |
| Calcium sulfate | $CaSO_4$ | | | X | X | 0 | 0 | 0 | Sulfato de calcio |
| Copper sulfate | $CuSO_4$ | | 20 | X | X | 3 | 2 | 0 | Sulfato de cobre (vitriolo azul) |
| Copper sulfate | $CuSO_4$ | | BP | X | X | 3 | 2 | 0 | Sulfato de cobre (vitriolo azul) |
| Hidroxilamina sulfate | $(NH_2OH)H_2SO_4$ | 10 | 20 | X | X | -- | -- | 0 | Sulfato de hidroxilamina |
| Hidroxilamina sulfate | $(NH_2OH)H_2SO_4$ | 10 | BP | X | X | -- | -- | 0 | Sulfato de hidroxilamina |
| Magnesium sulfate | $MgSO_4$ | | 20 | X | X | 1 | 1 | 0 | Sulfato de magnesio |
| Magnesium sulfate | $MgSO_4$ | | BP | X | X | 1 | 1 | 0 | Sulfato de magnesio |
| Sodium sulfate | $Na_2SO_4$ | | | X | X | 0 | 0 | 0 | Sulfato de sodio |
| Carbon tetrachlorure | $Ccl_4$ | | | X | X | 1 | 1 | 0 | Tetracloruro de carbono |
| Toluene or toluol | $C_6H_5CH_3$ | | 20 | X | X | 0 | 0 | 0 | Tolueno |
| trichloroethylene | $C_2HCl_3$ | | | X | X | 1 | 1 | 0 | Tricloruetileno |
| Turpentine | | | 20 | X | X | 0 | 0 | 0 | Turpentina |
| Urea | $(NH_2)_2CO$ | | 20 | X | X | 1 | 1 | 0 | Urea |
| Steam | | | | X | X | 0 | 0 | 0 | Vapor |
| Wine vinegar | | | 20 | X | X | -- | -- | 0 | Vinagre de vino |
| Xylene | $C_6H_4(CH_3)_2$ | | 20 | X | X | 0 | 0 | 0 | Xileno |

# Valve Sizing Calculation



## LIQUIDS

*Flow in $m^3/h$*

$$Cv = 1.16q\sqrt{\frac{G_f}{\Delta P}}$$

*Flow in ton/h*

$$Cv = \frac{1.16W}{\sqrt{G_f \Delta P}}$$

*Cv = Valve sizing coefficient (gpm)*
*$\Delta P = P_1 - P_2$*
*$P_1$ = Upstream pressure*
*$P_2$ = Downstream pressure*
*$G_f$ = Density (water =1kg/dm @ 15°C)*
*q = Liquid flow ($m^3/h$)*
*q = Liquid flow (ton/h)*

## SATURATE STEAM

*Sub-critic flow*
*$¥P < P_1/2$*

$$Cv = \frac{72.4W}{\sqrt{¥P(P_1+P_2)}}$$

*Critic flow*
*$¥P \geq P_1/2$*

$$Cv = \frac{104.2W}{P_1}$$

*Cv = Valve sizing coefficient (gpm)*
*$\Delta P = P_1 - P_2$*
*$P_1$ = Upstream pressure*
*$P_2$ = Downstream pressure*
*W = Steam flow (ton/h)*

## GASES

*Sub-critic flow*
*$¥P < P_1/2$*

$$Cv = \frac{Q}{295}\sqrt{\frac{GT}{¥P(P_1+P_2)}}$$

*Critic flow*
*$¥P \geq P_1/2$*

$$Cv = \frac{Q}{257}\sqrt{\frac{GT}{P_1}}$$

*Cv = Valve sizing coefficient (gpm)*
*$\Delta P = P_1 - P_2$*
*$P_1$ = Upstream pressure*
*$P_2$ = Downstream pressure*
*Q = Flow ($Nm^3/h$)*
*G = Relative density*
*T = Gas absolute temperature (°C + 273)*

***IMPORTANT:***
***Control valve parameter:***

*0.2 x (Cv of valves) < ( Cv calculater) < 0.8 x (Cv of valves)*

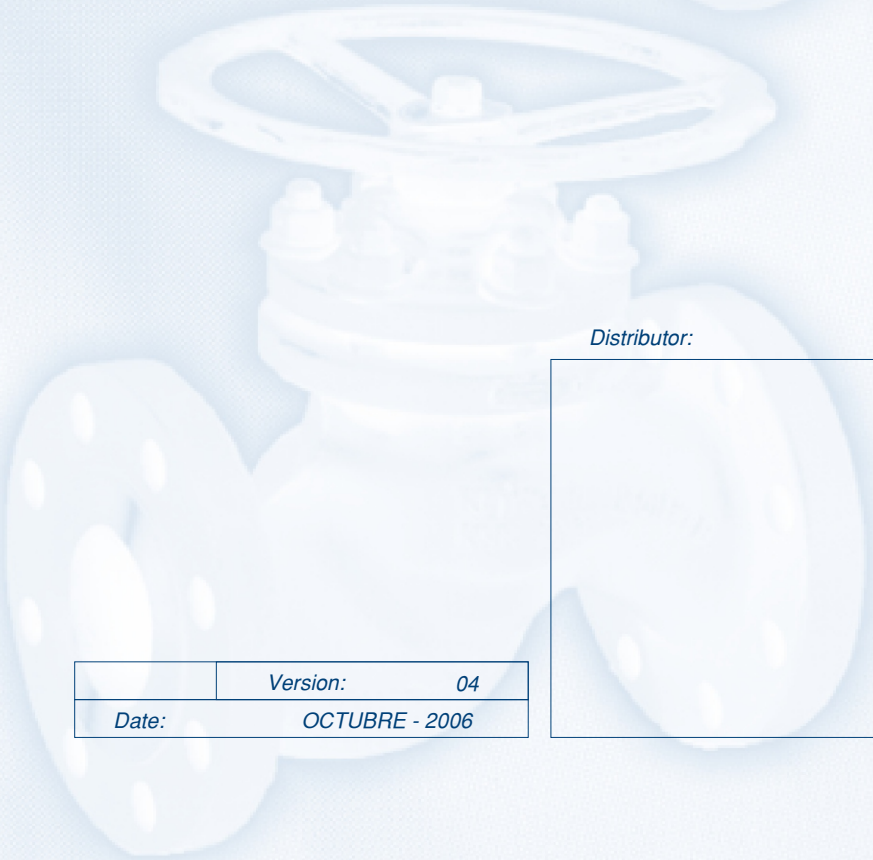

Distributor:

| | |
|---|---|
| | Version: 04 |
| Date: | OCTUBRE - 2006 |

K VALVES INTERNATIONAL S.A. DE C.V.
RIO ALTAR 2628, GUADALAJARA JALISCO MEXICO
C.P. 44898 TEL. (33) 3639 7444 FAX (33) 3639 7477